CEC
Since 1959

PART NO.	BASE TYPE	DESIGN VOLTS	DESIGN AMPS	MSCD	FILAMENT TYPE	AVERAGE LIFE HOURS
73B	Sub–miniature Glass Wedge (T–1 3/4)	14.0V	0.08±15%	0.3±30%	C–2F	15,000

REVISIONS

REV #	DESCRIPTION	DATE	APPROVED
1	ISSUED	06/05/2014	R.M.

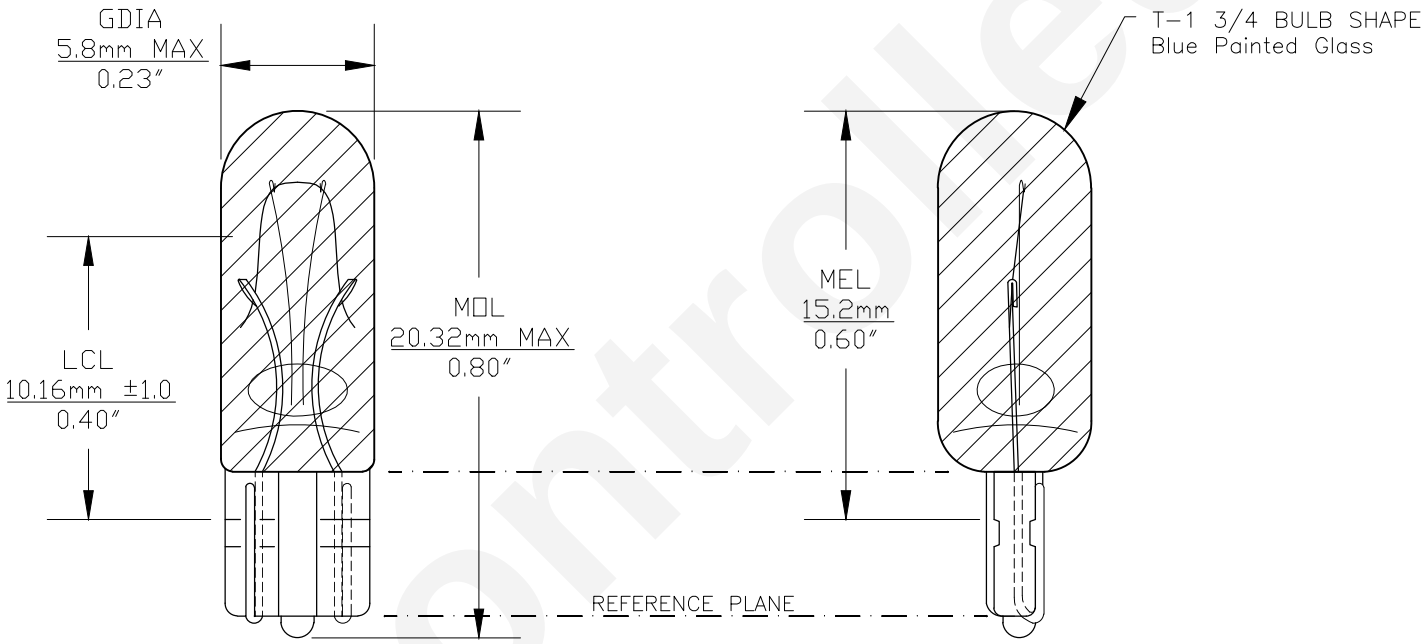

0° VIEW

90° VIEW

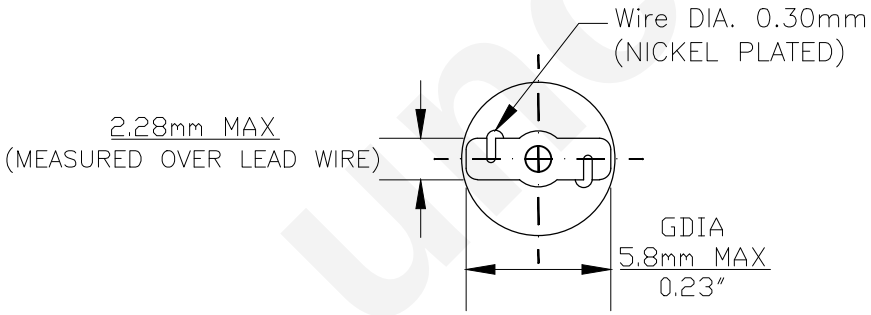

BASE BOTTOM VIEW

Note: Made according to SAE specifications

RoHS COMPLIANT

UNLESS OTHERWISE SPECIFIED:
DIMENSIONS ARE IN INCHES
TOLERANCES
DECIMALS .XX ± .05 .XXX ± .010
ANGULAR ± 0.5°
FRACTIONAL ±1/64

CEC INDUSTRIES LTD
599 BOND STREET LINCOLNSHIRE, IL 60069

DRAWN ROSE MEDINA	DATE 06/05/2014	TITLE LIGHT BULB NO. 73B	
CHECKED		SIZE A / FSCM NO. / DWG NO. 73B	REV 1
DESIGN		SCALE / PLOT SCALE	SHEET 1 OF 1
MATERIAL		FILE 73B.pdf	DRAWING NOT TO SCALE

uncontrolled