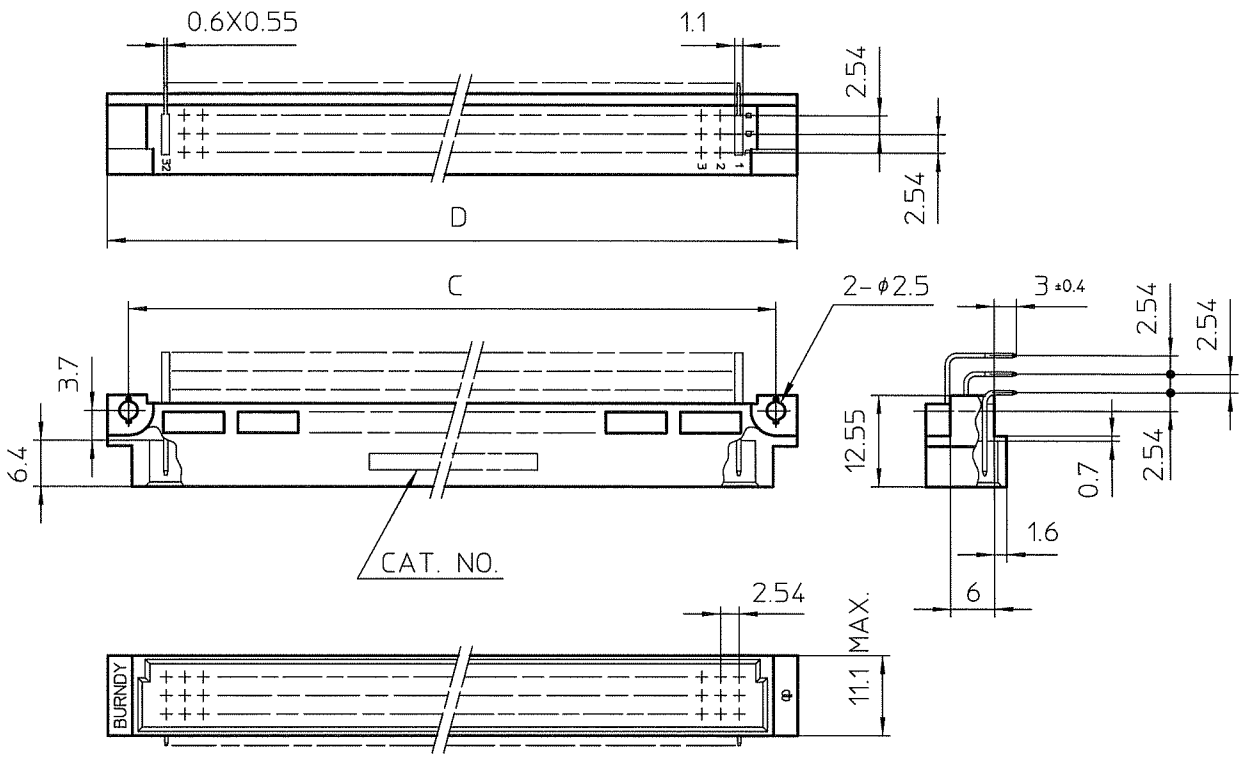

CAT. NO.	NO. OF CONTACTS	CONTACT ARRANGEMENT (ROW)	DIMENSIONS	
			C	D MAX.
PI48B30P-1TD2LF	16/ROW x 3 ROWS	a + b + c	48.3	54
PI48B32P-1TD2LF	16/ROW x 2 ROWS	a + c		
PI96B30P-1TD2LF	32/ROW x 3 ROWS	a + b + c	88.9	94
PI96B32P-1TD2LF	32/ROW x 2 ROWS	a + c		

MATERIAL

INSULATOR : PBT RESIN GLASS REINFORCED (UL94V-0)
COLOR : GRAY

CONTACT : COPPER ALLOY

CONTACT PLATING TABLE
[THICKNESS : μm]

CONTACT AREA	REMAINDER
GOLD 0.25 MIN. OVER NICKEL 3.2	Sn OVER NICKEL

mat'l. code				surface ISO 1302	tolerance ISO 406 ISO 1101	projection	product family 5FEF
ltr	ecn no	dr	date	tolerances unless otherwise specified			title PRINTED CIRCUIT CONNECTOR (Cat. No. PI48/96B30/32P-1TD2LF)
A	J07-0427	H.T	2007-8-23	angles	linear ±0.3	scale X	
				dr	2007-8-23	FCI	dwg no JSA 97353 sheet 1 of 1 size A4
				engr	2007-8-23		
				chr	2007-8-24		
				appd	2007-8-24		type Product Customer Drawing

sheet index	revision	A	Rev.
	sheet	1	A

SC-PI02 JSA91323 or 94276
form: A4

FCIconnect.com
Copyright FCI