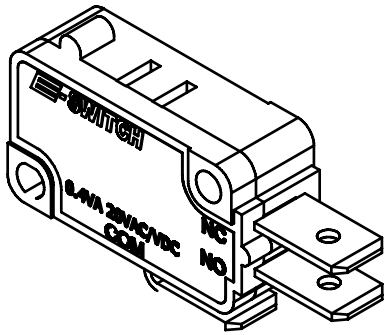


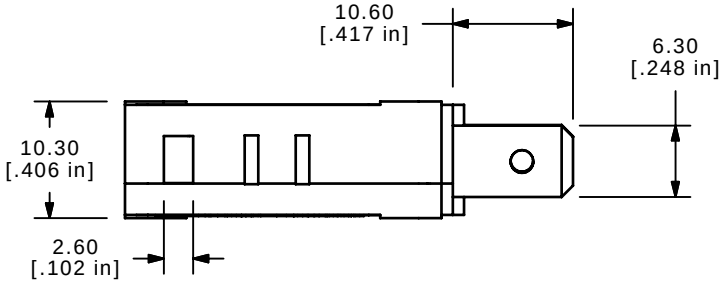


| ▲ O.P. (MM) | P.T. (MM) |
|---|---|
| 14.75± 0.5 | .9 NOM |

O.P. = OPERATING POINT
P.T. = PRE-TRAVEL

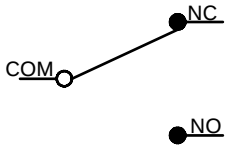


CIRCUIT: SPDT

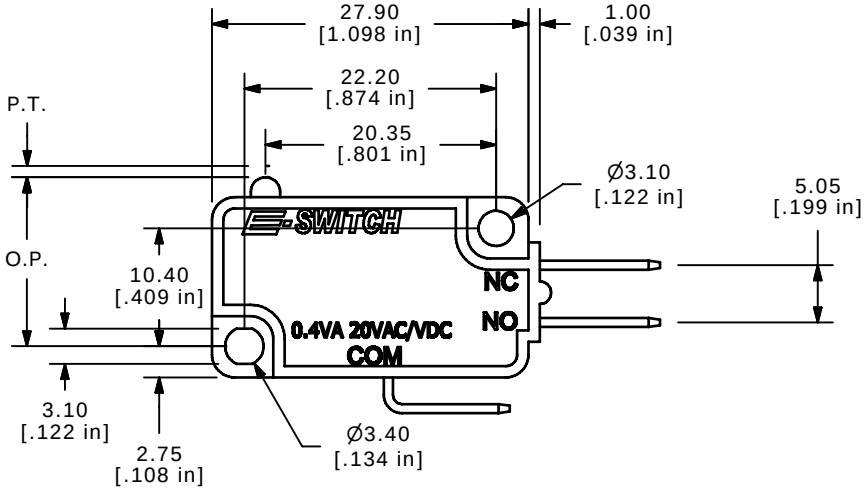


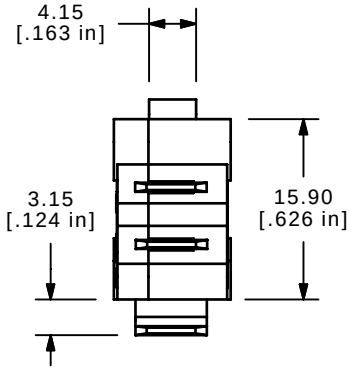


NOTES:
1. ALL DIMENSIONS IN MM [INCH]
2. GENERAL TOLERANCE: X.X=± 0.4
   X.XX=± 0.25
3. RATING: 0.4VA @20VAC OR DC
4. ▲ OPERATING FORCE: 100± 30 GRAMS
5. OPERATING TEMP: -25˚C TO 85˚C
6. ELECTRICAL LIFE: 10,000 CYCLES MIN.
7. MECHANICAL LIFE: 1,000,000 CYCLES TYP.
8. INSULATION RESISTANCE: >100 MEGA-OHMS @ 500VDC
9. DIELECTRIC STRENGTH: 1500VAC 1 MINUTE (INITAL VALUE)
10. CONTACT RESISTANCE: 100 MILLI -OHMS MAX.
11. ▲ DENOTES CRITICAL PARAMETER.
12. ▲ CONTACTS: 10 MICRO INCHES MINIMUM GOLD PLATING (P/N Q990000)
13. 2002/95/EC (ROHS) COMPLIANT

| REV | PCR NO | DESCRIPTION | DATE | BY |
|---|---|---|---|---|
| A | 20733 | RELEASED FOR PRODUCTION | 09/05/12 | rc |

*THE INFORMATION CONTAINED IN THIS DOCUMENT IS PROPRIETARY TO E-SWITCH AND IS NOT TO BE COPIED OR TRANSFERRED*

E-SWITCH®

TITLE LS085R100F100C2A

| SCALE | DATE | DR | DWG | REV |
|---|---|---|---|---|
| 1.5:1 | 9/5/2012 | rc | Q950106 | A |