ACCESSORIES

FOR USE WITH D-SUB CONNECTORS

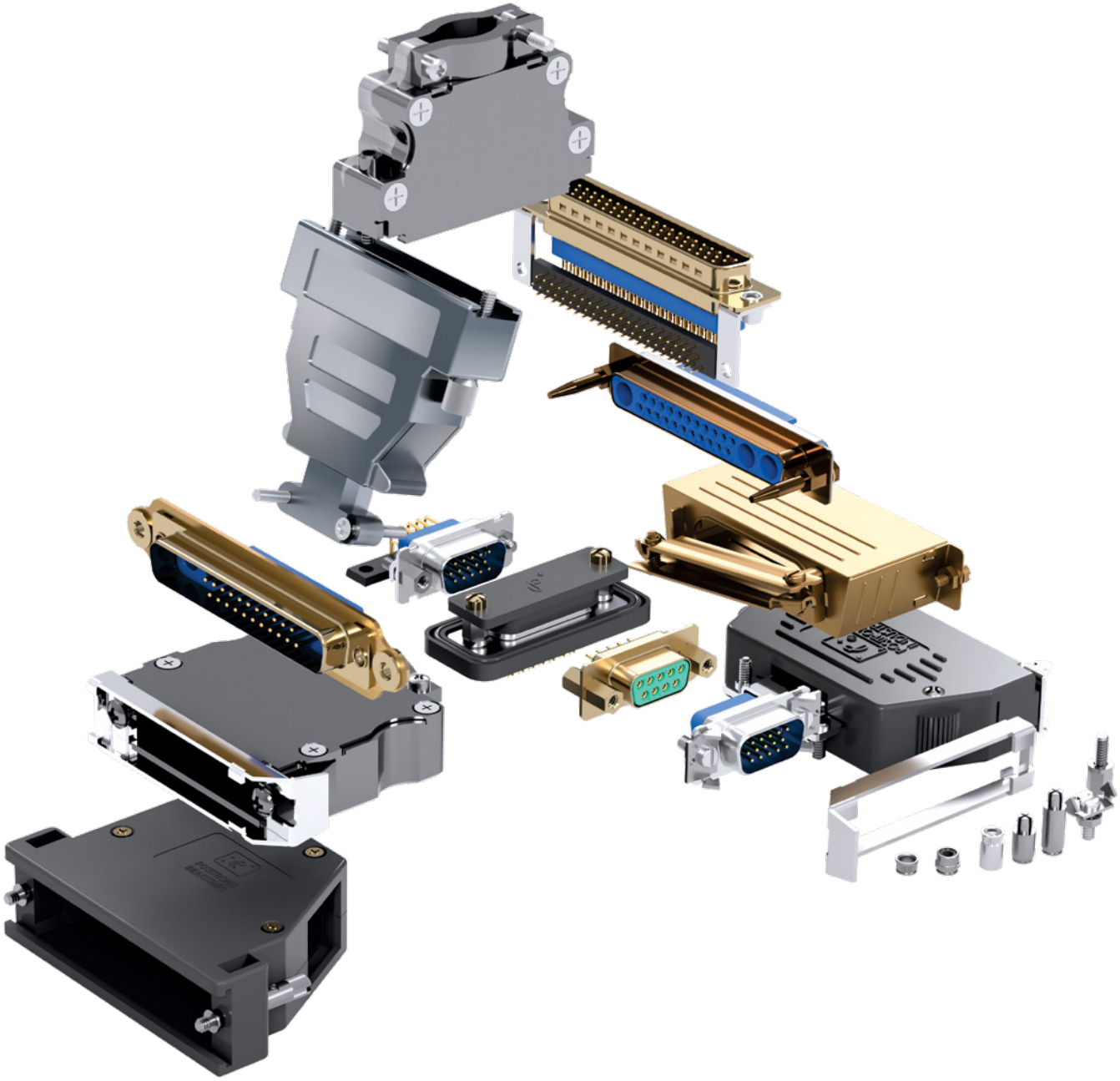

Positronic®

THE SCIENCE OF **CERTAINTY**®

M016 20/04

Positronic

Positronic builds premium power and signal connectors for a variety of industries. But every product delivers a single outcome: *Certainty*.

Driven by the mission-critical needs of our customers, we've gone to school on the subject for over 50 years. We approach it with scientific discipline – honing the fusion of raw material, engineering ingenuity, and precision manufacturing to push the next limits of reliability.

And with every new project, our curiosity is reignited. How will certainty be achieved in your system, with its own unique demands? The answers have graced the most formidable missions of our time, from the fires of super-sonic flight to the merciless scapes of Mars.

WHAT CAN YOU BE CERTAIN ABOUT?

- Rock-solid reliability
- Maximum design flexibility
- High efficiency, low heat performance
- Responsive, knowledgeable support

THE SCIENCE OF **CERTAINTY**®

TABLE OF CONTENTS

BACKSHELLS QUICK REFERENCE

A

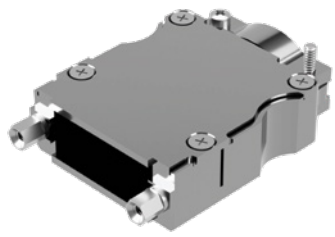

AL

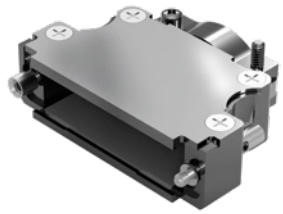

AS

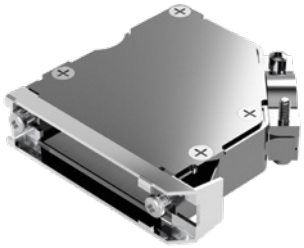

G

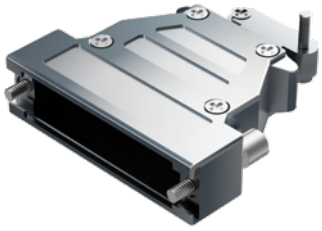

H

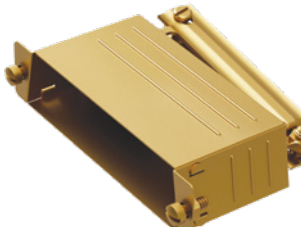

J

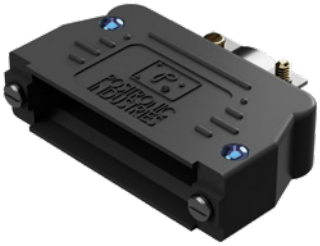

L

Y

Z

TECHNICAL CHARACTERISTICS						
Backshell Code	**Material**	**Finish**	**Cable Clamp (Material, finish)**	**Hardware (Material, finish)**	**Unique Attributes**	**Page**
AN*	aluminum	nickel	aluminum, nickel	steel with nickel plate	top opening, light weight, EMI	4-5
ALN*	aluminum	nickel	aluminum, nickel	steel with nickel plate	top opening, light weight, EMI, low profile	8
ASN*	aluminum	nickel	aluminum, nickel	steel with nickel plate	side opening, light weight, EMI	6-7
G	zinc, die cast		zinc, die cast		modular opening, EMI/RFI metal	10-13
H	steel	zinc plate with chromate seal	steel, zinc plate with chromate seal		similar to SAE AS85049/48	14
J	glass-filled polyester, UL94 V-0		steel, nickel plate		top opening, for vibration applications	16
L	glass-filled polyester, UL94 V-0		steel, nickel plate		side opening, for vibration applications	16
Y	composite polyester, UL94 V-0		steel, nickel plate for size 50 backshell only.	steel with zinc plate and chromate seal or tin plate; stainless steel, passivated.	EMI/RFI composite. Attenuation: 40+ decibels. Sizes 50 & 104 only	18
Z	composite polyester, UL94 V-0			steel with zinc plate and chromate seal or tin plate; stainless steel, passivated.	modular opening, EMI/RFI composite. Attenuation: 40+ decibels.	17

* See 'Material & Finish Options' chart on page 2 for additional options

LIGHTWEIGHT ALUMINUM BACKSHELL, QUICK REFERENCE

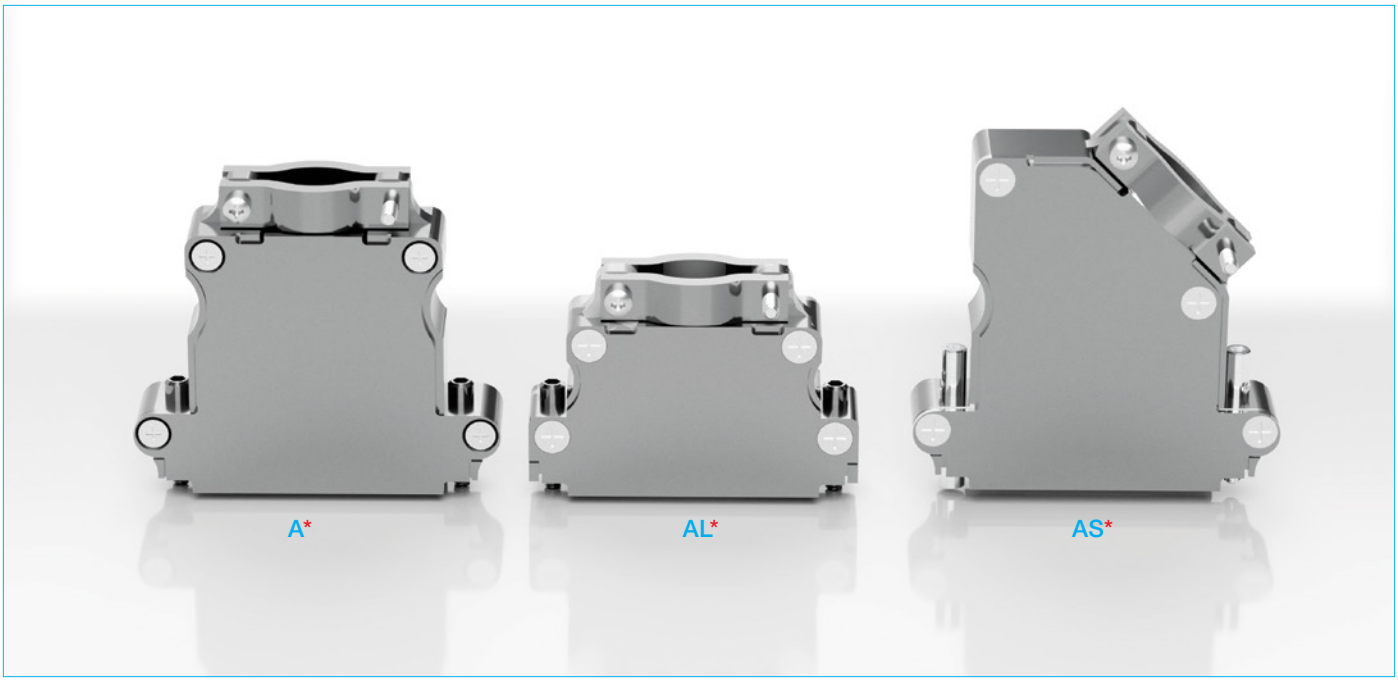

* See chart below for 'Material & Finish Options'

MATERIAL & FINISH OPTIONS								
Code	Backshell & Cable Clamp Finish	Hardware Type						Hardware Material & Finish
		T2	E	E6	E7	VL	V3	
N	Nickel	✓	✓	✓	✓	✓	✓	Steel with nickel plate
OPTIONAL MATERIAL & FINISHES								
A	Anodize	✓	✓	✓	✓	✓	✓	Steel with nickel plate
B	Anodize	✓	✓	✓	✓			Brass with zinc plate and chromate seal
C	No finish	✓	✓	✓	✓	✓	✓	Steel with nickel plate
D	No finish	✓	✓	✓	✓			Brass with zinc plate and chromate seal
I	Yellow chromate conversion	✓	✓	✓	✓	✓	✓	Steel with nickel plate
J	Yellow Chromate conversion	✓	✓	✓	✓			Brass with zinc plate and chromate seal

Custom Machined Aluminum Backshells Available!

Contact Technical Sales for details.

LIGHTWEIGHT ALUMINUM BACKSHELLS

This product has been designed for use in applications as a lightweight, EMI backshell for D-subminiature connectors. The features of the product are outlined below. Please contact technical sales for pricing and additional options.

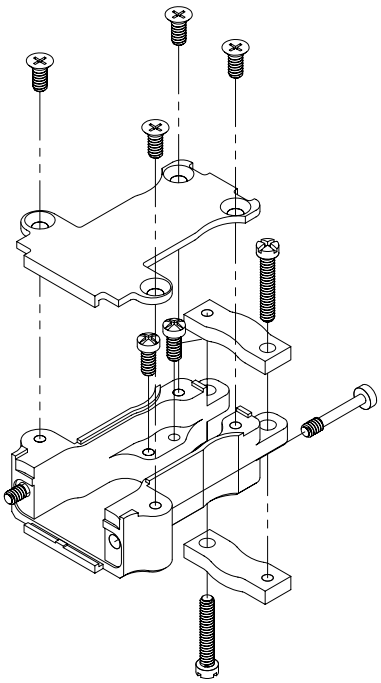

GROUND SCREWS

- Sized and spaced for use with 6.35mm [.250 inch] diameter ring terminals
- Ground shelf height and ground screw length allow for stacking of ring terminals
- Holes are pre-tapped for ease of installation
- Ground screws are located outside the exiting wire path to facilitate wire routing
- Ground holes are tapped through to the outside which provide for optional external grounding

SPACIOUS INTERIOR

- Shape maximizes internal area which facilitates harness assembly
- No obstructions behind any portion of the connector body allows backshell to be used with Combo-D connectors

APERTURE / STRAIN RELIEF

- Appropriate for high density wire bundles using twisted, shielded pairs
- Cable clamps can be “spooned” to provide strain relief for small wire bundle
- Wide form factor allows the user to easily meet bend radius requirements

THUMB GRIP

- Grip facilitates installation and removal in tight spaces

LOCKING SYSTEM

- Available with jackscrews or quick disconnect locking device

TECH SPECS

MATERIAL AND FINISHES	
Backshell & Cable Clamps	Aluminum; aluminum with electroless nickel plate; aluminum with yellow anodize; aluminum with yellow chromate conversion. Zinc content is 1% maximum.
Jackscrews & Screws	Steel with nickel plate; brass with zinc plate and chromate seal; brass, with 1.27µm min Au over Cu. Stainless steel options available, contact Technical Sales.
Actuation Lock System	Steel with nickel plate

ELECTRICAL	
Range of Operation, Calculated Method	2 GHz minimum.

MECHANICAL	
Ground Screws	Can accept up to 6.35mm [.250 inch] diameter ring terminal.
Locking System	Jackscrews or quick disconnect locking device

ENVIRONIMENTAL	
Operating Temperature	-55 to 125ºC

WEIGHT CHART *1		
Backshell Size	**D*2000ANVL Ounces [grams]**	**D*2000ANE Ounces [grams]**
9	1.43 [40.50]	1.08 [30.54]
15	1.60 [45.24]	1.32 [37.44]
25	1.95 [55.22]	1.62 [45.92]
37	2.53 [71.60]	2.19 [62.06]
50	2.61 [74.00]	2.26 [63.94]
104	n/a	2.41 [68.44]

*1 Contact Technical Sales for weights on T2, E6, E7 and V3 hardware options.
*2 Designates backshell size in part number. All hardware in a backshell assembly including cable clamps, screws, etc.

LIGHTWEIGHT ALUMINUM BACKSHELLS

For the sake of brevity, only basic dimensions are shown here. Full dimensional detail is available in the respective product drawings.

For use with code E, E6 or E7

A

Backshell, aluminum, top opening*1

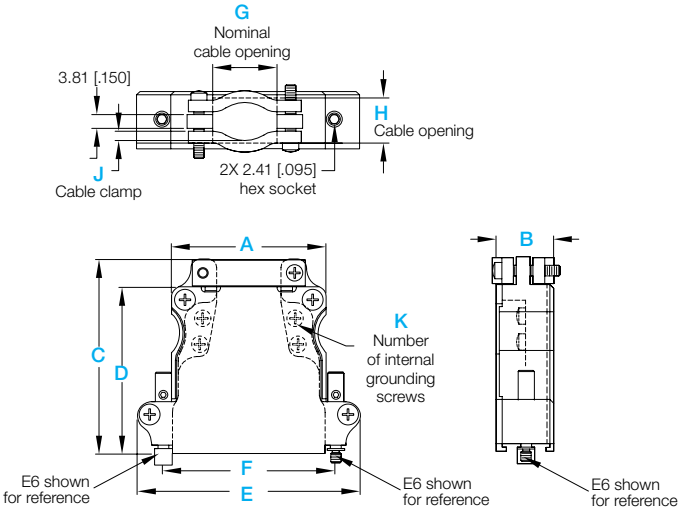

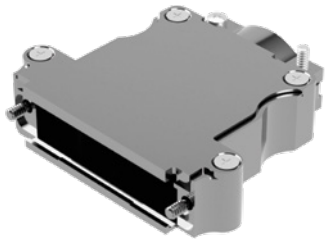

A backshell shown with **E** option

A backshell shown with **E6** option

A backshell shown with **E7** option

PART NUMBER	Connector / Contact Arrangement Compatibility		Shell Size	A	B	C	D	E	F	G	H (Min)	H (Max)	J	K
D9000AN*1E0*2 D9000AN*1E60*2 D9000AN*1E70*2	**Std-D**: 9 **High-D**: 15	**Combo-D**: 5W1, 2WK2 **Combo-D High-D**: 8W2	1	23.06 [.908]	15.65 [.616]	53.09 [2.090]	45.47 [1.790]	38.71 [1.524]	24.99 [.984]	9.19 [.362]	6.10 [.240]*3	12.27 [.483]	1.27 [.050]	4
D15000AN*1E0*2 D15000AN*1E60*2 D15000AN*1E70*2	**Std-D**: 15 **High-D**: 26	**Combo-D**: 3W3, 3WK3, 7W2, 11W1 **Combo-D High-D**: 19W1	2	31.39 [1.236]	15.65 [.616]	53.09 [2.090]	45.47 [1.790]	47.04 [1.852]	33.32 [1.312]	17.53 [.690]	8.89 [.350]*3	12.27 [.483]	2.54 [.100]	4
D25000AN*1E0*2 D25000AN*1E60*2 D25000AN*1E70*2	**Std-D**: 25 **High-D**: 44	**Combo-D**: 5W5, 9W4, 13W3, 17W2, 21W1 **Combo-D High-D**: 15W4	3	42.06 [1.656]	15.65 [.616]	53.09 [2.090]	45.47 [1.790]	60.76 [2.392]	47.04 [1.852]	17.53 [.690]	8.89 [.350]*3	12.27 [.483]	2.54 [.100]	4
D37000AN*1E0*2 D37000AN*1E60*2 D37000AN*1E70*2	**Std-D**: 37 **High-D**: 62	**Combo-D**: 8W8, 13W6, 17W5, 21WA4, 25W3, 27W2 **Combo-D High-D**: 45W2	4	58.52 [2.304]	15.65 [.616]	59.44 [2.340]	51.82 [2.040]	77.22 [3.040]	63.50 [2.500]	31.55 [1.242]	10.41 [.410]*3	12.27 [.483]	3.30 [.130]	6
D50000AN*1E0*2 D50000AN*1E60*2 D50000AN*1E70*2	**Std-D**: 50 **High-D**: 78	**Combo-D**: 24W7, 36W4, 43W2, 47W1 **Combo-D High-D**: n/a	5	56.13 [2.210]	18.47 [.727]	59.44 [2.340]	51.82 [2.040]	74.83 [2.946]	61.11 [2.406]	31.55 [1.242]	10.41 [.410]*3	15.09 [.594]	3.30 [.130]	6
D104000AN*1E0*2 D104000AN*1E60*2 D104000AN*1E70*2	**Std-D**: n/a **High-D**: 104	**Combo-D**: 46W4 **Combo-D High-D**: n/a	6	58.52 [2.304]	20.07 [.790]	59.44 [2.340]	51.82 [2.040]	77.22 [3.040]	63.50 [2.500]	31.55 [1.242]	10.41 [.410]*3	16.69 [.657]	3.30 [.130]	6

*1 For additional 'Material & Finish Options', replace 'N' with desired 'Code' from chart on page 2.
*2 For 1.27µm min Au over Cu, replace the last '0' with 'G' in part number and *1 note must remain as 'N' (e.g. D90000ANT2G)
*3 Smaller cable openings may be achieved by inverting one or both cable clamps.

LIGHTWEIGHT ALUMINUM BACKSHELLS

For the sake of brevity, only basic dimensions are shown here. Full dimensional detail is available in the respective product drawings.

For use with code T2, VL or V3

A

Backshell, aluminum, top opening*1

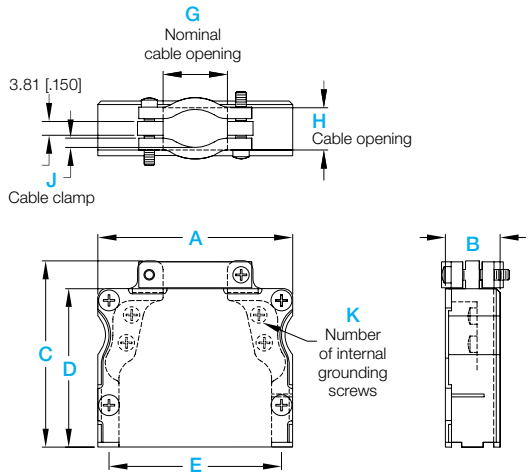

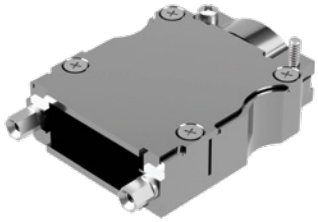

A backshell shown with **T2*** option
**also available with polarized fixed jackposts, contact Technical Sales for more information.*

A backshell shown with **V3*** option
**see page 20 for code 'V3' information.*

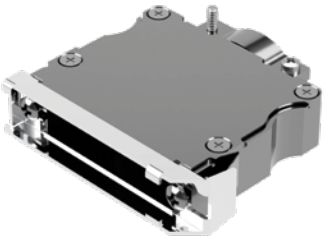

A backshell shown with **VL*** option
**see page 20 for code 'VL' information*

PART NUMBER	Connector / Contact Arrangement Compatibility		Shell Size	A	B	C	D	E	G	H (Min)	H (Max)	J	K
D9000AN*1T20*2 **D9000AN*1V30** **D9000AN*1VL0**	**Std-D**: 9 **High-D**: 15	**Combo-D**: 5W1, 2WK2 **Combo-D High-D**: 8W2	1	30.96 [1.219]	14.88 [.586]	50.08 [2.000]	43.18 [1.700]	24.99 [.984]	9.19 [.362]	6.10 [.240]*3	11.51 [.453]	1.14 [.045]	4
D15000AN*1T20*2 **D15000AN*1V30** **D15000AN*1VL0**	**Std-D**: 15 **High-D**: 26	**Combo-D**: 3W3, 3WK3, 7W2, 11W1 **Combo-D High-D**: 19W1	2	39.29 [1.547]	14.88 [.586]	50.08 [2.000]	43.18 [1.700]	33.32 [1.312]	17.53 [.690]	8.89 [.350]*3	11.51 [0.453]	2.54 [.100]	4
D25000AN*1T20*2 **D25000AN*1V30** **D25000AN*1VL0**	**Std-D**: 25 **High-D**: 44	**Combo-D**: 5W5, 9W4, 13W3, 17W2, 21W1 **Combo-D High-D**: 15W4	3	53.19 [2.094]	14.88 [.586]	50.08 [2.000]	43.18 [1.700]	47.04 [1.852]	17.53 [.690]	8.89 [.350]*3	11.51 [0.453]	2.54 [.100]	4
D37000AN*1T20*2 **D37000AN*1V30** **D37000AN*1VL0**	**Std-D**: 37 **High-D**: 62	**Combo-D**: 8W8, 13W6, 17W5, 21WA4, 25W3, 27W2 **Combo-D High-D**: 45W2	4	69.49 [2.736]	14.88 [.586]	57.15 [2.250]	49.53 [1.950]	63.50 [2.500]	31.55 [1.242]	10.41 [.410]*3	11.51 [0.453]	3.30 [.130]	6
D50000AN*1T20*2 **D50000AN*1V30** **D50000AN*1VL0**	**Std-D**: 50 **High-D**: 78	**Combo-D**: 24W7, 36W4, 43W2, 47W1 **Combo-D High-D**: n/a	5	67.11 [2.642]	17.70 [.697]	57.15 [2.250]	49.53 [1.950]	61.11 [2.406]	31.55 [1.242]	10.41 [.410]*3	14.33 [.564]	3.30 [.130]	6
D104000AN*1T20*2	**Std-D**: n/a **High-D**: 104	**Combo-D**: 46W4 **Combo-D High-D**: n/a	6	69.49 [2.736]	19.30 [.760]	57.15 [2.250]	49.53 [1.950]	63.50 [2.500]	31.55 [1.242]	10.41 [.410]*3	15.93 [.627]	3.30 [.130]	6

*1 For additional 'Material & Finish Options', replace 'N' with desired 'Code' from chart on page 2.
*2 For 1.27µm min Au over Cu, replace the last '0' with 'G' in part number and *1 note must remain as 'N' (e.g. D90000ANT2G)
*3 Smaller cable openings may be achieved by inverting one or both cable clamps.

LIGHTWEIGHT ALUMINUM BACKSHELLS

For the sake of brevity, only basic dimensions are shown here. Full dimensional detail is available in the respective product drawings.

For use with code E, E6 or E7

AS

Backshell, aluminum, side opening*1

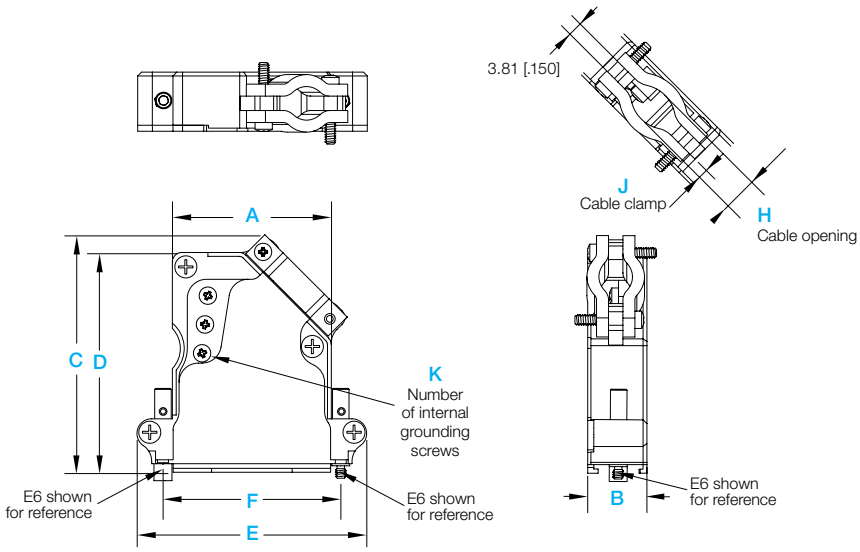

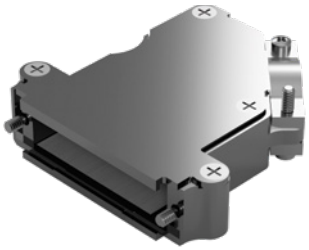

AS backshell shown with **E** option

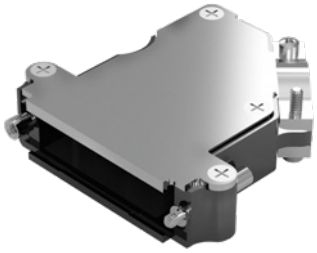

AS backshell shown with **E6** option

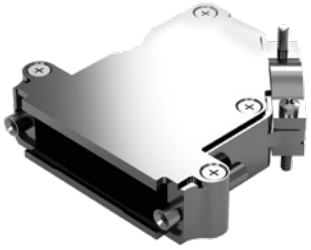

AS backshell shown with **E7** option

PART NUMBER	Connector / Contact Arrangement Compatibility		Shell Size	A	B	C	D	E	F	G	H (Min)	H (Max)	J	K
D9000ASN*1E0*2 D9000ASN*1E60*2 D9000ASN*1E70*2	**Std-D**: 9 **High-D**: 15	**Combo-D**: 5W1, 2WK2 **Combo-D High-D**: 8W2	1	20.01 [.788]	15.65 [.616]	55.84 [2.198]	50.30 [1.980]	38.72 [1.524]	24.99 [.984]	8.64 [.340]	6.10 [.240]*3	12.27 [.483]	1.14 [.045]	1
D15000ASN*1E0*2 D15000ASN*1E60*2 D15000ASN*1E70*2	**Std-D**: 15 **High-D**: 26	**Combo-D**: 3W3, 3WK3, 7W2, 11W1 **Combo-D High-D**: 19W1	2	28.24 [1.112]	15.65 [.616]	62.91 [2.477]	56.90 [2.240]	47.07 [1.852]	33.32 [1.312]	10.21 [.402]	8.89 [.350]*3	12.27 [.483]	2.54 [.100]	2
D25000ASN*1E0*2 D25000ASN*1E60*2 D25000ASN*1E70*2	**Std-D**: 25 **High-D**: 44	**Combo-D**: 5W5, 9W4, 13W3, 17W2, 21W1 **Combo-D High-D**: 15W4	3	42.06 [1.656]	15.65 [.616]	62.85 [2.474]	58.17 [2.290]	60.76 [2.392]	47.04 [1.852]	10.21 [.402]	8.89 [.350]*3	12.27 [.483]	2.54 [.100]	3
D37000ASN*1E0*2 D37000ASN*1E60*2 D37000ASN*1E70*2	**Std-D**: 37 **High-D**: 62	**Combo-D**: 8W8, 13W6, 17W5, 21WA4, 25W3, 27W2 **Combo-D High-D**: 45W2	4	58.52 [2.304]	15.65 [.616]	74.07 [2.916]	68.08 [2.680]	77.22 [3.040]	63.50 [2.500]	31.52 [1.241]	10.41 [.410]*3	12.27 [.483]	3.30 [.130]	4
D50000ASN*1E0*2 D50000ASN*1E60*2 D50000ASN*1E70*2	**Std-D**: 50 **High-D**: 78	**Combo-D**: 24W7, 36W4, 43W2, 47W1 **Combo-D High-D**: n/a	5	56.13 [2.210]	18.47 [.727]	74.07 [2.916]	68.08 [2.680]	74.83 [2.946]	61.11 [2.406]	31.52 [1.241]	10.41 [.410]*3	15.09 [.594]	3.30 [.130]	4
D104000ASN*1E0*2 D104000ASN*1E60*2 D104000ASN*1E70*2	**Std-D**: n/a **High-D**: 104	**Combo-D**: 46W4 **Combo-D High-D**: n/a	6	58.52 [2.304]	20.07 [.790]	74.07 [2.916]	68.08 [2.680]	77.22 [3.040]	63.50 [2.500]	31.52 [1.241]	10.41 [.410]*3	16.69 [.657]	3.30 [.130]	4

*1 For additional 'Material & Finish Options', replace 'N' with desired 'Code' from chart on page 2.
*2 For 1.27µm min Au over Cu, replace the last '0' with 'G' in part number and *1 note must remain as 'N' (e.g. D90000ANT2G)
*3 Smaller cable openings may be achieved by inverting one or both cable clamps.

LIGHTWEIGHT ALUMINUM BACKSHELLS

For the sake of brevity, only basic dimensions are shown here. Full dimensional detail is available in the respective product drawings.

For use with code T2, VL or V3

AS

Backshell, aluminum, side opening*1

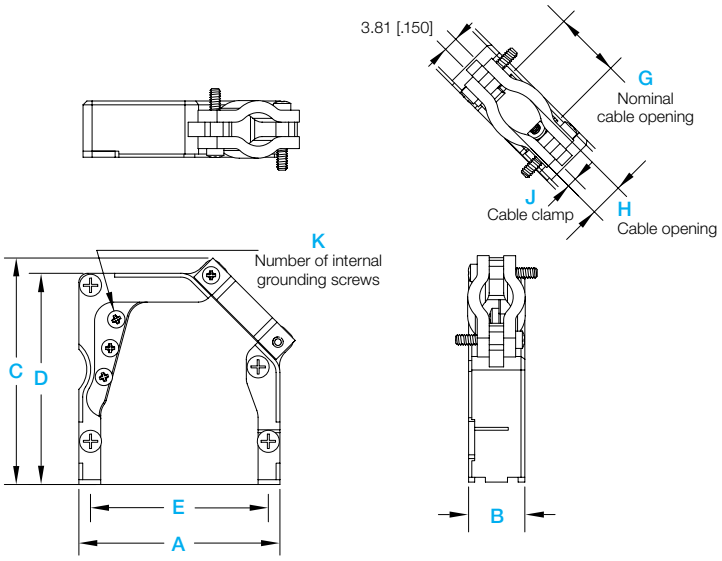

AS backshell shown with **T2** option

AS backshell hown with **V3*** option

**see page 20 for code 'V3' information*

AS backshell shown with **VL*** option

**see page 20 for code 'VL' information*

PART NUMBER	Connector / Contact Arrangement Compatibility		Shell Size	A	B	C ±0.64 [.025]	D	E	G	H (Min)	H (Max)	J	K
D9000ASN*1T20*2 **D9000ASN*1V30** **D9000ASN*1VL0**	**Std-D**: 9 **High-D**: 15	**Combo-D**: 5W1, 2WK2 **Combo-D High-D**: 8W2	1	30.96 [1.219]	14.88 [.586]	50.92 [2.005]	48.26 [1.900]	24.99 [.984]	8.64 [.340]	6.10 [.240]*3	11.51 [0.453]	1.14 [.045]	2
D15000ASN*1T20*2 **D15000ASN*1V30** **D15000ASN*1VL0**	**Std-D**: 15 **High-D**: 26	**Combo-D**: 3W3, 3WK3, 7W2, 11W1 **Combo-D High-D**: 19W1	2	39.29 [1.547]	14.88 [.586]	59.96 [2.361]	55.88 [2.200]	33.32 [1.312]	10.21 [.402]	8.89 [.350]*3	11.51 [0.453]	2.54 [.100]	3
D25000ASN*1T20*2 **D25000ASN*1V30** **D25000ASN*1VL0**	**Std-D**: 25 **High-D**: 44	**Combo-D**: 5W5, 9W4, 13W3, 17W2, 21W1 **Combo-D High-D**: 15W4	3	53.19 [2.094]	14.88 [.586]	59.96 [2.361]	55.88 [2.200]	47.04 [1.852]	10.21 [.402]	8.89 [.350]*3	11.51 [0.453]	2.54 [.100]	3
D37000ASN*1T20*2 **D37000ASN*1V30** **D37000ASN*1VL0**	**Std-D**: 37 **High-D**: 62	**Combo-D**: 8W8, 13W6, 17W5, 21WA4, 25W3, 27W2 **Combo-D High-D**: 45W2	4	69.49 [2.736]	14.88 [.586]	73.17 [2.881]	69.85 [2.750]	63.50 [2.500]	31.52 [1.241]	10.41 [.410]*3	11.51 [0.453]	3.30 [.130]	4
D50000ASN*1T20*2 **D50000ASN*1V30** **D50000ASN*1VL0**	**Std-D**: 50 **High-D**: 78	**Combo-D**: 24W7, 36W4, 43W2, 47W1 **Combo-D High-D**: n/a	5	67.11 [2.642]	17.70 [.697]	73.17 [2.881]	69.85 [2.750]	61.11 [2.406]	31.52 [1.241]	10.41 [.410]*3	14.33 [.564]	3.30 [.130]	4
D104000ASN*1T20*2	**Std-D**: n/a **High-D**: 104	**Combo-D**: 46W4 **Combo-D High-D**: n/a	6	69.49 [2.736]	19.30 [.760]	73.17 [2.881]	69.85 [2.750]	63.50 [2.500]	31.52 [1.241]	10.41 [.410]*3	15.93 [.627]	3.30 [.130]	4

*1 For additional 'Material & Finish Options', replace 'N' with desired 'Code' from chart on page 2.
*2 For 1.27µm min Au over Cu, replace the last '0' with 'G' in part number and *1 note must remain as 'N' (e.g. D90000ANT2G)
*3 Smaller cable openings may be achieved by inverting one or both cable clamps.

LIGHTWEIGHT ALUMINUM BACKSHELLS

For the sake of brevity, only basic dimensions are shown here. Full dimensional detail is available in the respective product drawings.

For use with code E, E6 or E7

AL

Backshell, aluminum, top opening*1, low profile

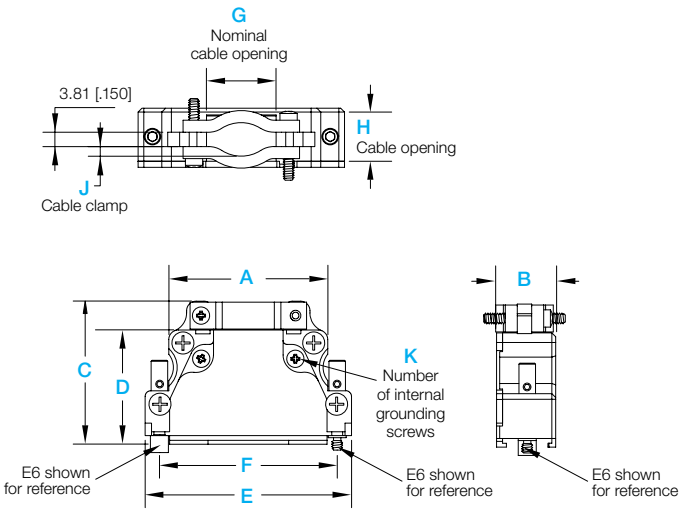

AL backshell shown with **E** option

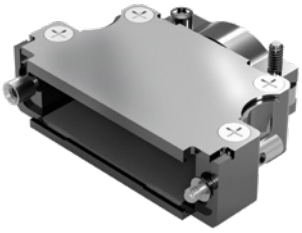

AL backshell shown with **E6** option

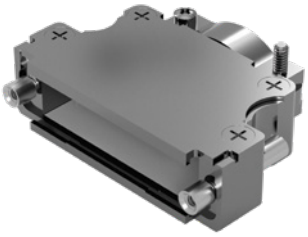

AL backshell shown with **E7** option

PART NUMBER	Connector / Contact Arrangement Compatibility	Shell Size	A	B	C	D	E	F	G	H (Min)	H (Max)	J	K
D9000ALN*1E0*2 D9000ALN*1E60*2 D9000ALN*1E70*2	**Std-D**: 9 **High-D**: 15	1	20.32 [.800]	15.65 [.616]	35.05 [1.380]	27.69 [1.090]	32.33 [1.273]	24.99 [.984]	8.64 [.340]	5.81 [.229]*3	11.98 [0.471]	1.140 [.045]	1
D15000ALN*1E0*2 D15000ALN*1E60*2 D15000ALN*1E70*2	**Std-D**: 15 **High-D**: 26	2	28.45 [1.120]	15.65 [.616]	37.85 [1.490]	30.23 [1.190]	40.64 [1.600]	33.32 [1.312]	10.21 [.402]	6.10 [.240]*3	12.27 [.483]	1.140 [.045]	2
D25000ALN*1E0*2 D25000ALN*1E60*2 D25000ALN*1E70*2	**Std-D**: 25 **High-D**: 44	3	42.06 [1.656]	15.65 [.616]	37.85 [1.490]	30.23 [1.190]	54.61 [2.150]	47.04 [1.852]	18.42 [.725]	8.89 [.350]*3	12.27 [.483]	2.54 [.100]	2
D37000ALN*1E0*2 D37000ALN*1E60*2 D37000ALN*1E70*2	**Std-D**: 37 **High-D**: 62	4	58.52 [2.304]	15.65 [.616]	37.85 [1.490]	30.23 [1.190]	71.12 [2.800]	63.50 [2.500]	31.52 [1.241]	10.41 [.410]*3	12.27 [.483]	3.30 [.130]	2
D50000ALN*1E0*2 D50000ALN*1E60*2 D50000ALN*1E70*2	**Std-D**: 50 **High-D**: 78	5	56.13 [2.210]	18.47 [.727]	37.85 [1.490]	30.23 [1.190]	68.60 [2.701]	61.11 [2.406]	31.44 [1.238]	10.41 [.410]*3	15.09 [.594]	3.30 [.130]	2
D104000ALN*1E0*2 D104000ALN*1E60*2 D104000ALN*1E70*2	**Std-D**: n/a **High-D**: 104	6	58.52 [2.304]	20.07 [.790]	37.85 [1.490]	30.23 [1.190]	71.12 [2.800]	63.50 [2.500]	31.52 [1.241]	10.41 [.410]*3	16.69 [.657]	3.30 [.130]	2

*1 For additional 'Material & Finish Options', replace 'N' with desired 'Code' from chart on page 2.
*2 For 1.27µm min Au over Cu, replace the last '0' with 'G' in part number and *1 note must remain as 'N' (e.g. D90000ANT2G)
*3 Smaller cable openings may be achieved by inverting one or both cable clamps.

DIECAST / METAL BACKSHELL, QUICK REFERENCE

HARDWARE QUICK REFERENCE OPTIONS										
Backshell	No Hardware	Rotating Jackscrews	Fixed Jackscrews	Quick Disconnect Locking System	Low Profile	Extended Height	Adapter	Cable Opening	EMI / RFI	Page
G	✓	✓	✓	✓	✓	✓	✓	Modular	EMI/RFI	10-13
H	✓	✓	✓	✓	✓			Top		14

ZINC, DIECAST BACKSHELLS*1

For the sake of brevity, only basic dimensions are shown here. Full dimensional detail is available in the respective product drawings.

For use with code VL

G (Low Profile)

Backshell, modular opening, zinc, die cast, EMI/RFI, low profile

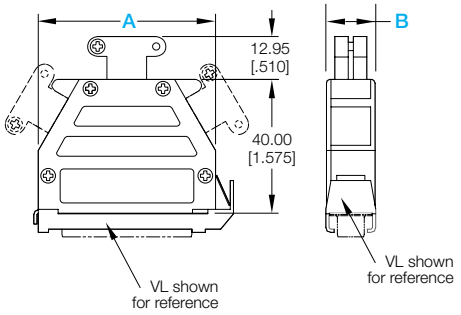

G (Extended)

Backshell, extended height, modular opening, zinc, die cast, EMI/RFI

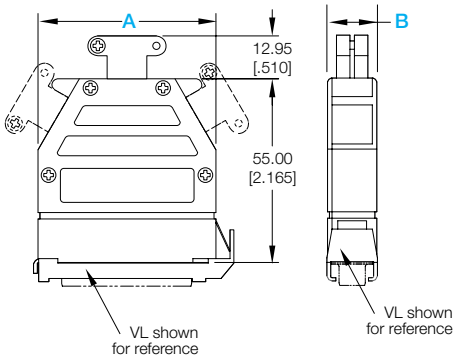

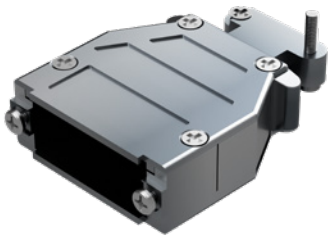

G backshell 'low profile' shown

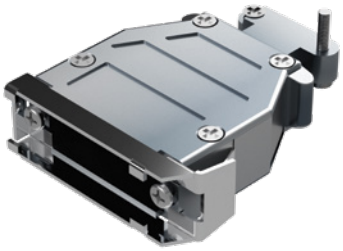

G backshell 'low profile' shown with **VL*** option
**see page 20 for code 'VL' information*

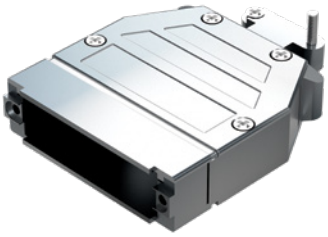

G backshell shown with **-1023.2** extended option

G backshell shown with **-1023.0** extended and VL* options
**see page 20 for code 'VL' information*

FEATURES

- Automatic rapid locking system keeps connection secure and is easy to unlock using the slide latch when needed.
- Gripping shoulders enable trouble-free extraction of the connector assembly, even with tightly packed aligned cable adapters.
- Cable adapters are designed with multiple entries and can permit the looping through of cables. Cable entries not used are sealed to maintain EMI/RFI shielding.
- Two height options are available, low-profile or an increased height option.

PART NUMBER	Shell Size	Backshell Height		A	B	Cable Exit Option	Cable Opening	
		Low Profile	Extended				(Min)	(Max)
D9000G00 D9000GVL0	1	Low Profile		32.00 [1.260]	14.60 [.575]	2 Side*2	3.00 [.118]	11.99 [.472]
D9000G00-1023.2 D9000GVL0-1023.0			Extended					
D15000G00 D15000GVL0	2	Low Profile		39.30 [1.547]	14.60 [.575]	1 Top, 2 Side*3	3.00 [.118]	11.99 [.472]
D15000G00-1023.2 D15000GVL0-1023.0			Extended					
D25000G00 D25000GVL0	3	Low Profile		53.20 [2.094]	14.60 [.575]	1 Top, 2 Side*3	3.00 [.118]	11.99 [.472]
D25000G00-1023.2 D25000GVL0-1023.0			Extended					
D37000G00 D37000GVL0	4	Low Profile		69.50 [2.736]	14.60 [.575]	1 Top, 2 Side*3	3.00 [.118]	11.99 [.472]
D37000G00-1023.2 D37000GVL0-1023.0			Extended					
D50000G00 D50000GVL0	5	Low Profile		67.00 [2.638]	17.90 [.705]	1 Top, 2 Side*3	5.00 [.197]	14.00 [.551]
D50000G00-1023.2 D50000GVL0-1023.0			Extended					

*1 To prevent stripping of the backshell assembly screws, we recommend using pozidriv screwdriver bits available from stock using part number 9535-2-2-0, contact Technical Sales. For the mounting screws, we recommend using a standard phillips head screwdriver bit.

*2 These backshells are supplied with one (1) cable clamp set and one (1) opening plug. See page 13 for optional crimp Ferrule system.

*3 These backshells are supplied with one (1) cable clamp set and two (2) opening plugs. See page 13 for optional crimp Ferrule system.

ZINC, DIE CAST BACKSHELLS*1

For use with code E

For the sake of brevity, only basic dimensions are shown here. Full dimensional detail is available in the respective product drawings.

G (Low Profile)

Backshell, modular opening, zinc, die cast, EMI/RFI, low profile

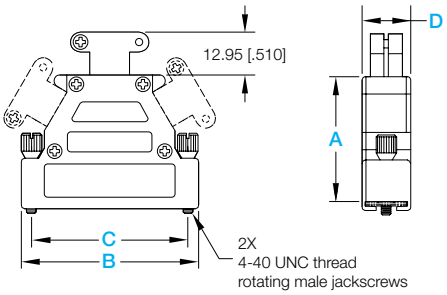

G (Extended)

Backshell, extended height, modular opening, zinc, die cast, EMI/RFI

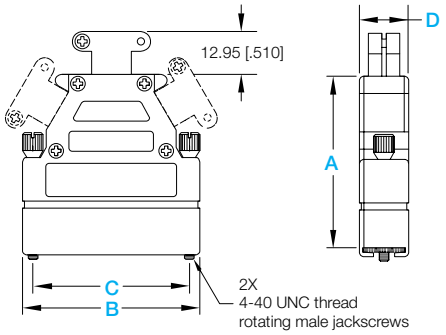

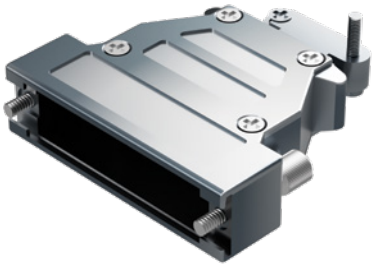

G backshell 'low profile' shown with **E** option

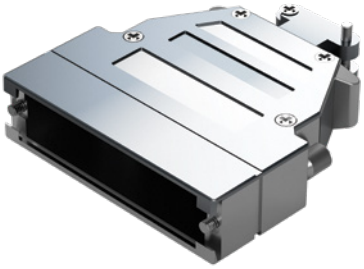

G backshell shown with **-1023.5** extended and internal hex jackpost options

FEATURES

- Gripping shoulders enable trouble-free extraction of the connector assembly even with tightly packed aligned backshells.
- Rotating jackscrews offer the most secure mechanical locking of the connector system.
- Standard height backshells for use with connector shell sizes 1 and 2 are available with a top or side cable exit option. Contact Technical Sales for details.
- For use with connector shell sizes 3 - 5 are designed with three (3) cable entries and can permit the looping through of cables. Cable entries not used are sealed with supplied metal plugs to maintain EMI/RFI shielding qualities.
- Two (2) height options are available, one being a low profile option. An extended height option is offered for use with power conductors and coaxial cable, such as might be used with the Positronic CBD/CBM series connectors.
- Grounding to the backshells may be accomplished by fastening wires inside backshell with an M2.5 threaded Posidriv head screw.

PART NUMBER	Shell Size	Backshell Height		A	B	C	D	Cable Exit Option	Cable Opening	
		Low Profile	Extended						(Min)	(Max)
D9000GE0 D9000GE0-1023.50	1	Low Profile		35.50 [1.398]	31.00 [1.220]	25.00 [.984]	14.80 [.582]	1 Top 1 Side 1 Side 1 Top	3.00 [.118]	11.99 [.472]
D9000GE0-1023.5 D9000GE0-1023.49			Extended*2	50.50 [1.988]						
D15000GE0 D15000GE0-1579.0	2	Low Profile		40.00 [1.575]	39.40 [1.551]	33.30 [1.311]	14.80 [.582]	1 Top, 1 Side*3 1 Side*3 1 Top, 1 Side*3	3.00 [.118]	11.99 [.472]
D15000GE0-1023.5			Extended*2	55.00 [2.165]						
D25000GE0	3	Low Profile		40.00 [1.575]	53.20 [2.094]	47.00 [1.850]	14.80 [.582]	1 Top, 2 Side*4	3.00 [.118]	11.99 [.472]
D25000GE0-1023.5			Extended*2	55.00 [2.165]						
D37000GE0	4	Low Profile		40.00 [1.575]	69.50 [2.736]	63.50 [2.500]	14.80 [.582]	1 Top, 2 Side*4	3.00 [.118]	11.99 [.472]
D37000GE0-1023.5			Extended*2	55.00 [2.165]						
D50000GE0	5	Low Profile		42.00 [1.654]	67.00 [2.638]	61.10 [2.406]	17.60 [.692]	1 Top, 2 Side*4	5.00 [.197]	14.00 [.551]
D50000GE0-1023.5			Extended*2	57.00 [2.244]						
D104000GE0	6	Low Profile		39.62 [1.560]	72.01 [2.835]	63.50 [2.500]	19.40 [.764]	1 Top, 2 side*4	5.00 [.197]	14.00 [.551]

*1 To prevent stripping of the backshell assembly screws, we recommend using Pozidriv screwdriver bits available from stock using part number 9535-2-2-0, contact Technical Sales. Standard height GE backshell use the Pozidriv style jackscrews.

*2 The extended height backshells use an internal hex jackscrew. Internal hex jackscrews are available for the standard height, but require an MOS.

*3 These backshells are supplied with one (1) cable clamp set and one (1) opening plug. See page 13 for optional crimp Ferrule system.

*4 These backshells are supplied with one (1) cable clamp set and two (2) opening plugs. See page 13 for optional crimp Ferrule system.

ZINC, DIE CAST ADAPTERS

For the sake of brevity, only basic dimensions are shown here. Full dimensional detail is available in the respective product drawings.

For use with code G backshell

GA (Adapter)

Backshell adapter, side opening, zinc, die cast, EMI/RFI

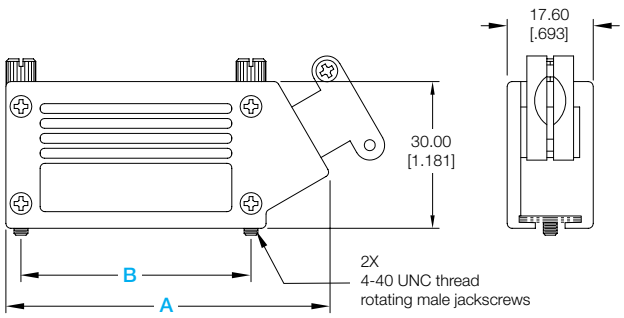

GA adapter shown

FEATURES

- Can be used as a gender changer which provides EMI/RFI protection.
- Allows for internal placement of a printed circuit board between the connectors.
- Can be used to adapt connectors of one interface standard to another.
- Used in applications where tapping into the electrical line path between connectors is necessary. A cable exit is provided for this application.
- If no connector is inserted into the rear side of the adapter backshell, the opening can be closed with a optional cover plate which can be adapted for use with LED's, mini-switches, and coaxial connectors. (Optional cover plate to be ordered separately)
- Jackscrew locking system is supplied as a standard for secure mechanical coupling.
- Grounding to the backshell may be accomplished by fastening wires inside backshell with an M2.5 threaded Pozidrive head screw.

PART NUMBER	Shell Size	A	B	Cable Opening		Optional Cover Plate	Optional Cable Opening Plug*2
				(Min)	(Max)		
D9000GA0	1	44.00 [1.733]	25.00 [0.984]	3.00 [.118]	11.99 [.472]	A4589-9-0-0*3	A4596-1-0-0*3
D15000GA0	2	52.30 [2.059]	33.30 [1.311]	3.00 [.118]	11.99 [.472]	A4589-15-0-0*3	A4596-1-0-0*3
D25000GA0	3	66.00 [2.598]	47.00 [1.850]	3.00 [.118]	11.99 [.472]	A4589-25-0-0*3	A4596-1-0-0*3
D37000GA0	4	82.50 [3.248]	63.50 [2.500]	3.00 [.118]	11.99 [.472]	A4589-37-0-0*3	A4596-1-0-0*3

*1 To prevent stripping of the backshell assembly screws, we recommend using Pozidriv screwdriver bits available from stock using part number 9535-2-2-0, contact Technical Sales.

*2 See page 13 for optional Crimp Ferrule System.

*3 Must be purchased separately.

CRIMP FERRULE SYSTEMS

For use with code G backshell

The crimp ferrule system can be used with all Positronic code “G” backshells and is recommended when maximizing EMI/RFI protection is desired.

The crimp ferrule system optimizes the transition of the cable shield into the cable adapter in three ways.

- It provides a low impedance connection of the cable shield to the cable adapter which remains constant over time.
- The system provides an EMI/RFI tight cable exit point.
- The system provides for high mechanical retention of the cable in the cable adapter.

Crimp ferrule (top left) and crimp flange (bottom right)

APPLICATION INSTRUCTIONS

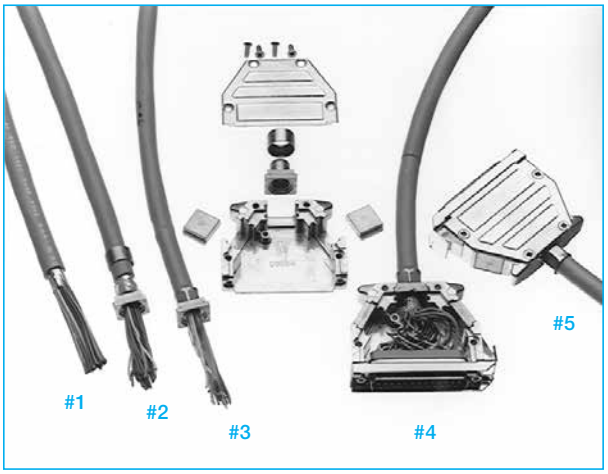

Application of the crimp ferrule system is quite simple.

- **#1** once the cable insulation and shield are cut to the correct dimensions
- **#2** the crimp ferrule is placed over the cable and the crimp flange is inserted between the shield and the conductors
- **#3** the crimp ferrule is now slid over the cable insulation into position over the crimp flange and the crimp is made using Positronic-supplied hand press and die sets
- **#4** this assembly is then terminated to the connector and placed into the cable adapter
- **#5** finally, the cover is placed on the cable adapter and secured using four (4) screws

To order the Positronic supplied hand press, request part number 9520-0-0-0 or for hand crimp tool, request part number 9521-3-0-0.

To order Positronic-supplied die sets, contact Technical Sales for ordering information, since die sets are customized based on the specific crimp flanges, crimp ferrules and cables used.

CRIMP FERRULE / FLANGE CREAT A PART

A4592	***	***	0	Crimp ferrule
A4593	***	***	0	Crimp flange

Basic Series

A4592 Crimp ferrule
A4593 Crimp flange

Plating

0 Standard plating

Diameters*1

*1 Contact Technical Sales for part number completion which is determined by customer-required cable diameters and type.

METAL BACKSHELLS

For the sake of brevity, only basic dimensions are shown here. Full dimensional detail is available in the respective product drawings.

H

Backshell, metal, top opening

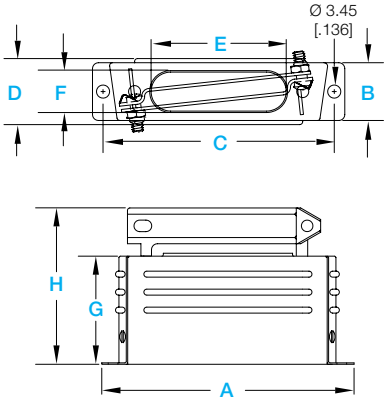

H backshell shown

PART NUMBER	Shell Size	A	B	C	D (Max)	E	F	G	H (Max)
D15000H00	2	38.89 [1.531]	12.47 [0.491]	33.32 [1.312]	14.68 [.578]	18.11 [.713]	7.92 [.312]	19.05 [.750]	30.96 [1.219]
D25000H00	3	52.78 [2.078]	12.47 [0.491]	47.04 [1.852]	14.68 [.578]	25.40 [1.000]	7.92 [.312]	25.40 [1.000]	38.91 [1.532]
D37000H00	4	69.03 [2.718]	12.47 [0.491]	63.50 [2.500]	14.68 [.578]	34.93 [1.375]	7.92 [.312]	25.40 [1.000]	38.91 [1.532]
D50000H00	5	66.68 [2.625]	15.27 [.601]	61.11 [2.406]	17.45 [.687]	35.69 [1.405]	10.31 [.406]	28.58 [1.125]	42.09 [1.657]

PLASTIC / COMPOSITE BACKSHELL, QUICK REFERENCE

HARDWARE QUICK REFERENCE OPTIONS										
Backshell	No Hardware	Rotating Jackscrews	Fixed Jackscrews	Quick Disconnect Locking System	Low Profile	Extended Height	Adapter	Cable Opening	EMI / RFI	Page
J	✓		✓	✓				Top		16
L	✓		✓	✓				Side		16
Y		✓						Top	EMI/RFI	18
Z		✓	✓					Modular	EMI/RFI	17

PLASTIC BACKSHELLS

For the sake of brevity, only basic dimensions are shown here. Full dimensional detail is available in the respective product drawings.

For use with code VL, V3 and V5

J

Backshell, plastic, top opening

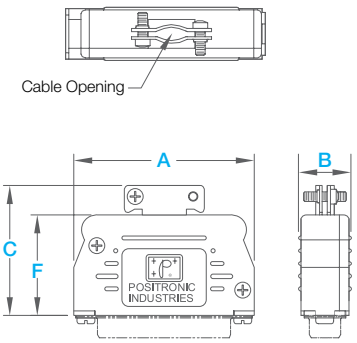

L

Backshell, plastic, side opening

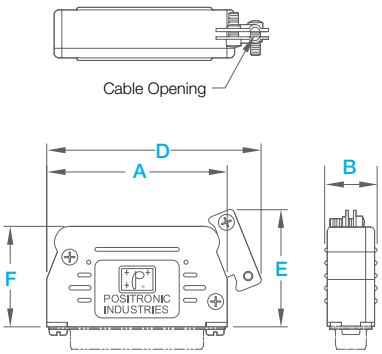

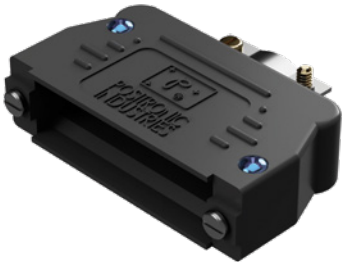

J backshell shown

J backshell shown with **V3*** option
**see page 20 for code 'V3' information*

J backshell shown with **V5** option
**see page 20 for code 'V5' information*

J backshell shown with **VL** option
**see page 20 for code 'VL' information*

L backshell shown

PART NUMBER	Shell Size	A	B	C	D	E	F	Cable Opening	
								(Min)	(Max)
D9000J0*[1]0 D9000L0*[1]0	1	32.05 [1.262]	15.06 [.593]	29.11 [1.146]	38.61 [1.520]	26.16 [1.030]	21.95 [.864]	Ø3.43 [.145]	Ø7.11 [.280]
D15000J0*[1]0 D15000L0*[1]0	2	39.40 [1.551]	15.77 [.621]	34.44 [1.356]	48.26 [1.900]	31.50 [1.240]	25.96 [1.022]	Ø4.06 [.160]	Ø6.99 [.275]
D25000J0*[1]0 D25000L0*[1]0	3	54.08 [2.129]	15.77 [.621]	39.70 [1.563]	63.30 [2.492]	35.05 [1.380]	30.12 [1.186]	Ø2.79 [.110]	Ø6.99 [.275]
D37000J0*[1]0 D37000L0*[1]0	4	70.66 [2.782]	15.77 [.621]	49.94 [1.848]	79.20 [3.188]	42.93 [1.690]	38.25 [1.506]	5.84 X 16.00 [.230] X [.630]	8.89 X 16.00 [.350] X [.630]
D50000J0*[1]0 D50000L0*[1]0	5	68.28 [2.688]	18.62 [.733]	49.94 [1.848]	76.58 [3.015]	42.93 [1.690]	38.25 [1.506]	5.84 X 16.00 [.230] X [.630]	10.92 X 16.00 [.430] X [.630]

*[1] Replace '0' with desired code 'V3, V5 or VL' to obtain desired hardware for backshell (e.g. D9000JV30)

COMPOSITE BACKSHELLS

For the sake of brevity, only basic dimensions are shown here. Full dimensional detail is available in the respective product drawings.

Z*1

Backshell, composite, modular opening, rotating male jackscrews

Z4*1

Backshell, composite, modular opening, fixed female jackposts

Z6*1

Backshell, composite, modular opening, rotating polarized jackscrews

Z7*1

Backshell, composite, modular opening, rotating female jackposts

Z backshell shown with rotating male jackscrews

Z4 backshell shown with fixed female jackposts

Z6 backshell shown with male and female rotating jackscrews

Z7 backshell shown with female rotating jackscrews

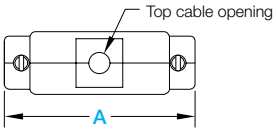

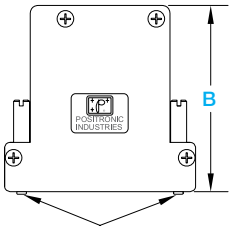

Jackscrews shown for reference

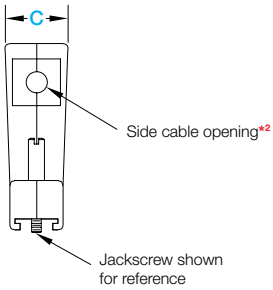

Notes

*1 Illustration is shown for Z backshell. The only difference for Z4, Z6 and Z7 backshells will be jackscrew system.

*2 Side opening is not available on shell size 5.

TYPICAL INSERTS

Various inserts are provided to accommodate different cable sizes. (for shell size 1 through 4)

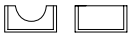

INSERT TREE ASSEMBLY

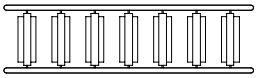

PART NUMBER	Shell Size	A	B	C	Cable Opening (Min)	Cable Opening (Max)
D9000Z00 D9000Z400 D9000Z600 D9000Z700	1	35.23 [1.387]	49.15 [1.935]	18.80 [.740]	2.54 [.100]	10.16 X 14.48 [.400] X [.570]
D15000Z00 D15000Z400 D15000Z600 D15000Z700	2	43.56 [1.715]	49.15 [1.935]	18.74 [.738]	2.54 [.100]	10.16 X 14.48 [.400] X [.570]
D25000Z00 D25000Z400 D25000Z600 D25000Z700	3	57.25 [2.254]	55.88 [2.200]	18.74 [.738]	2.54 [.100]	13.97 X 14.48 [.550] X [.570]
D37000Z00 D37000Z400 D37000Z600 D37000Z700	4	73.74 [2.903]	55.88 [2.200]	18.62 [.733]	2.54 [.100]	13.97 X 14.48 [.550] X [.570]
D50000Z00 D50000Z400 D50000Z600 D50000Z700	5	71.35 [2.809]	68.58 [2.700]	22.74 [.895]	2.54 [.100]	Ø16.00 [.630]

COMPOSITE BACKSHELLS

For the sake of brevity, only basic dimensions are shown here. Full dimensional detail is available in the respective product drawings.

Y (size 50)*1

Backshell, composite, size 50, top opening, rotating male jackscrews

Y6 (size 50)*1

Backshell, composite, size 50, top opening, rotating polarized jackscrews

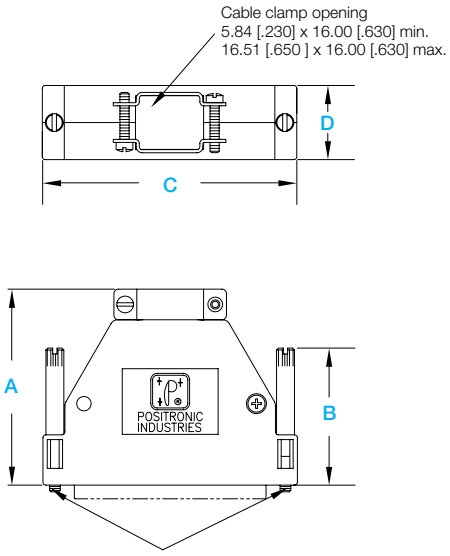

Y (size 104)*1

Backshell, composite, size 104, top/side opening, rotating male jackscrews

Y6 (size 104)*1

Backshell, composite, size 104, top/side opening, rotating polarized jackscrews

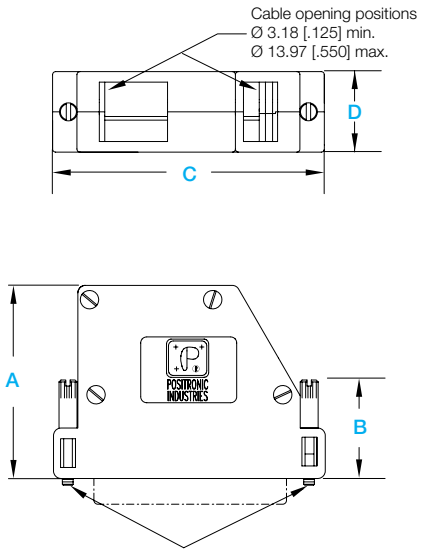

Note *1 Illustrations shown for Y backshell. The only difference for Y6 backshell will be jackscrew system and 'B' dimension.

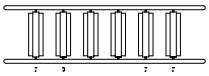

Cable opening insert tree for size 104 backshell

Y for size 50

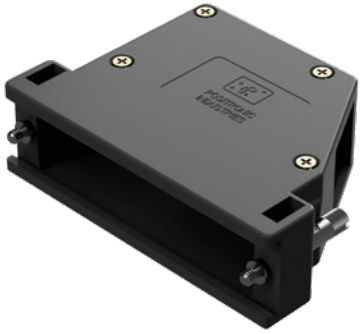

Y for size 104

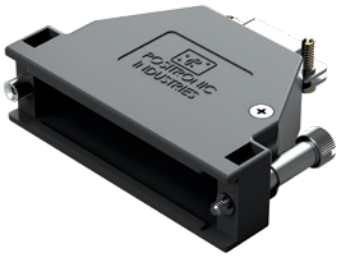

Y6 for size 50

Y6 for size 104

Contact Technical Sales for availability of other size backshells

PART NUMBER	Shell Size	A	B	C	D
D50000Y00	5	51.94 [2.045]	38.02 [1.497]	67.44 [2.655]	19.66 [.774]
D50000Y600			30.08 [1.200] max.		
D104000Y00	6	51.08 [2.011]	26.04 [1.025]	71.88 [2.830]	21.29 [.838]
D104000Y600			25.04 [.986]		

JACKSCREW SYSTEM

T, T2, T3 or T7

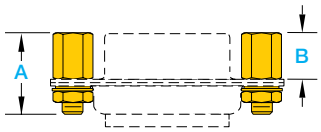

CODE	Description	A	B
T*3	Fixed female jackposts, 4-40 UNC threads*1	11.10 [.437]	6.35 [.250]
T2*3	Fixed female jackposts, 4-40 UNC threads*1, washer set	12.70 [.500]	5.03 [.198]
T3*3	Fixed female jackposts, 4-40 UNC threads*1, washer set	20.65 [.813]	5.03 [.198]
T7*2 *3	Fixed female jackposts, 4-40 UNC threads	10.92 [.430]	4.57 [.180]

E or E3

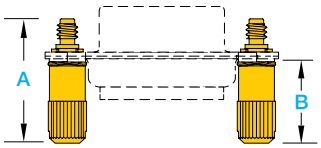

CODE	Description	A	B
E*3	Rotating male jackscrews, 4-40 UNC threads, slotted thumbscrews	16.43 [.647]	11.10 [.437]
E3*3	Rotating male jackscrews, 4-40 UNC threads, internal hex, low profile	16.43 [.647]	11.10 [.437]

E2

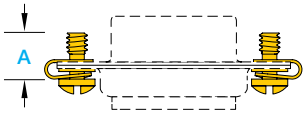

CODE	Description	A
E2*3	Rotating male jackscrews, 4-40 UNC threads, slotted, low profile	6.10 [.240]

*1 Internal thread length of T, T2 or T3 jackscrews is 3.05 [.120] nominal. Jackscrew supplied on connectors in combination with other accessories may differ dimensionally, contact Technical Sales for more information.

*2 T7 jackscrews supplied on connectors in combination with other accessories may differ dimensionally, contact Technical Sales for more information.

*3 T, T2, T3, T7, E, E2 or E3 passivated stainless steel jackscrews available. Contact Technical Sales for ordering information.

JACKSCREW SYSTEM - CODING DEVICE (KEYING)

T6*2

Fixed female jackpost, fixed male jackscrew, 4-40 UNC threads

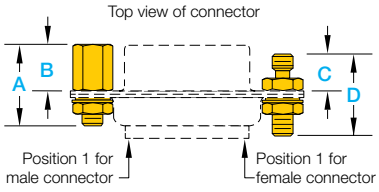

A	B	C	D
11.30 [.445]	5.59 [.220]	4.93 [.194]	11.07 [.436]

E6*2

Rotating male jackscrews, rotating female jackpost, 4-40 UNC threads*1

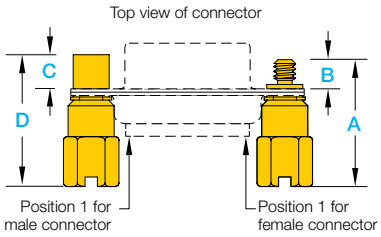

A	B	C	D
16.94 [.667]	3.84 [.151]	4.50 [.177]	17.60 [.693]

*1 For customer installations of knobs onto jackscrews, recommend set screw torque value of 16 in-oz. Recommend application of thread lock to set screw.

*2 T6 or E6 passivated stainless steel options available. Contact Technical Sales for ordering information.

JACKSCREW SYSTEM - CODING DEVICE (KEYING) OPTIONS

UP TO EIGHT CODING DEVICE OPTIONS!

Jackscrews can be supplied in configurations to allow for up to four coding device options, as shown in the table. an additional four coding device options can be achieved by reversing the connector genders.

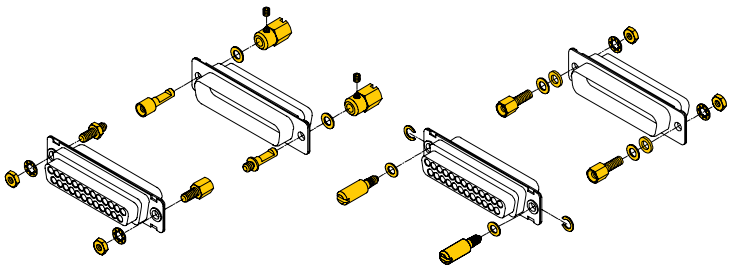

Option	Male Connector	Code (MOS)	Female Connector	Code (MOS)
1	2 male rotating	E *2	2 female fixed	T *2
2	2 female rotating	E6 *2 (-833.7*3)	2 male fixed	T6 *2 (-866.1*3)
3	1 female rotating*1 1 male rotating*1	E6 *2	1 male fixed*1 1 female fixed*1	T6 *2
4*4	1 male rotating*1 1 female rotating*1	E6 *2 (-1827.1*3)	1 female fixed*1 1 male fixed*1	T6 *2 (-1827.0*3)

*1 Additional options are achieved by switching male and female genders.
*2 For dimensional information see page 19.
*3 To achieve keying option required, add MOS suffix '-833.7', '-866.1', '-1827.1' or '-1827.0' to end of final part number.
*4 Reverse polarized connector.

QUICK DISCONNECT LOCKING SYSTEMS

V3

Lock tabs, use with free cable or front panel mount connectors

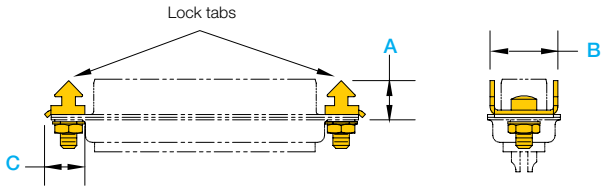

PART NUMBER	Shell Size	A	B	C
D9/370000V30	1	6.86 [.270]	11.68 [.460]	6.91 [.272]
D9/370000V30	2	6.86 [.270]	11.68 [.460]	6.91 [.272]
D9/370000V30	3	6.86 [.270]	11.68 [.460]	6.91 [.272]
D9/370000V30	4	6.86 [.270]	11.68 [.460]	6.91 [.272]
D500000V30	5	6.86 [.270]	14.73 [.580]	6.91 [.272]

V5

Lock tabs, use with rear panel mount connectors

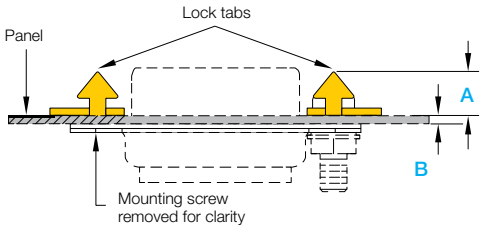

Rear View of Panel

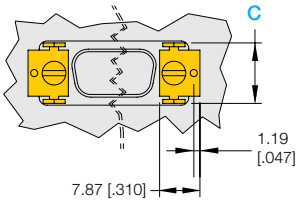

PART NUMBER	Shell Size	A	B (Max)	C
D9/370000V50	1	4.32 [.170]	1.57 [.062]	11.81 [.465]
D9/370000V50	2	4.32 [.170]	1.57 [.062]	11.81 [.465]
D9/370000V50	3	4.32 [.170]	1.57 [.062]	11.81 [.465]
D9/370000V50	4	4.32 [.170]	1.57 [.062]	11.81 [.465]
D500000V50	5	4.32 [.170]	1.57 [.062]	14.86 [.585]

VL

Actuation lock lever*1

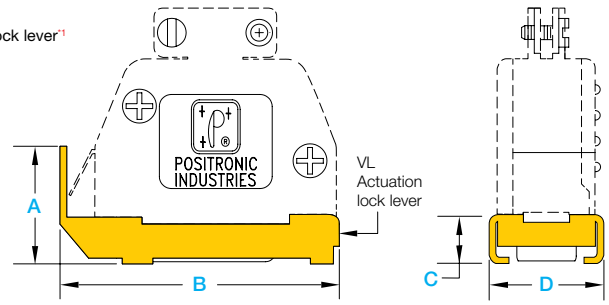

*1 May be used with front or back mounted locking tabs, see V3 and V5.

PART NUMBER	Shell Size	A	B	C	D (Max)
D90000VL0	1	14.73 [.580]	37.08 [1.460]	6.53 [.257]	15.04 [.592]
D150000VL0	2	14.73 [.580]	44.96 [1.770]	6.53 [.257]	15.04 [.592]
D250000VL0	3	14.73 [.580]	59.94 [2.360]	6.53 [.257]	15.04 [.592]
D370000VL0	4	14.73 [.580]	76.58 [3.015]	6.53 [.257]	15.04 [.592]
D500000VL0	5	16.13 [.635]	73.66 [2.900]	6.78 [.267]	17.91 [.705]

CLEARANCE HOLE / FLOAT MOUNTS

0

Clearance hole, Ø3.05±0.13 [.120±.005]
For non-stainless steel connector housing (shells)

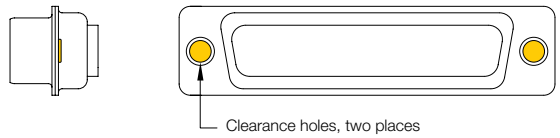

0

Clearance hole, Ø3.05±0.13 [.120±.005]
For stainless steel connector housing (shells)

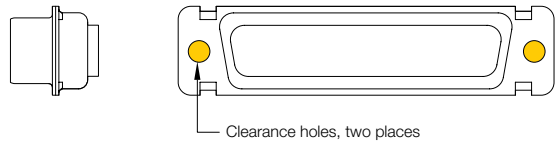

02

Clearance hole, Ø3.91 [.154]

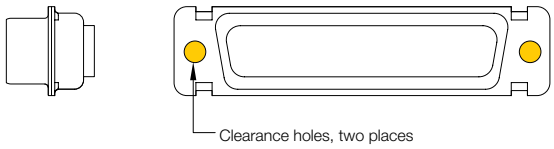

F

Float mounts

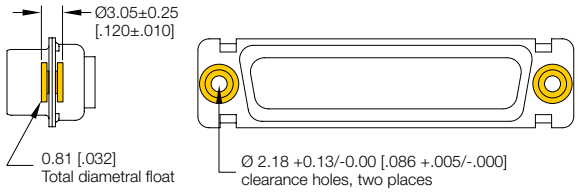

SWAGED SPACERS

C5

Standoffs, swaged, boardlock, cul-de-sac style, 4-40 threaded hole, 8.89 [.350]

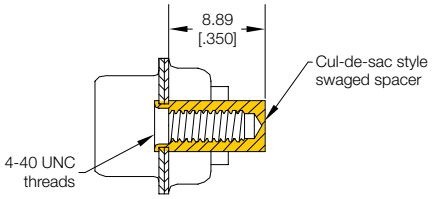

C7

Inside wall mount, angle brackets, boardlocks, alignment bar

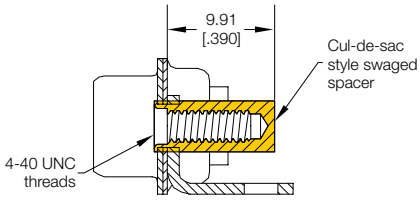

P

Standoffs, removable, brass

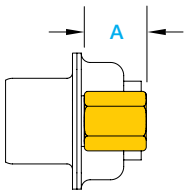

SERIES	Termination Code	A
MD, MDX, ED, HDC	all	5.72 [.225]
ODD	21, 3, 32, 4, 5	
CBD, CBDD, CBM	all	6.35 [.250]
RD, ORD, DD, CBC, CBCD	all	9.53 [.375]
ODD	0, 1, 2	
SD	all	11.10 [.437]

S

Standoffs, swaged, 4-40

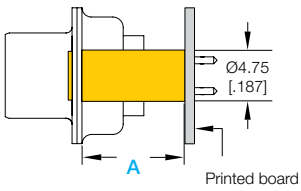

Internal View of Standoff

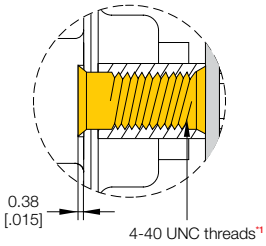

*1 Non-removable threaded hardware is built and inspected to 0.56 Nm [5in/lbs] or 80 in/oz torque.

SERIES	Termination Code	A
MD, MDX, HDC	all	5.72 [.225]
ODD	21, 3, 32, 4, 5	
SND	2, 3, 32, 36, 42, 5	
CBD, CBM, CBDD	2, 21, 3, 35, 36, 37, 4, 5, 55, 57, 7, 75,77, 65, 85	6.35 [.250]
SCBM	0, 2, 3, 35, 36, 37, 5, 55, 57, 65, 7, 75, 77, 85	
SCBDD	21, 3, 35, 36, 37, 4, 45, 47, 65, 84	
CBD, CBM, CBDD	93	6.73 [.265]
PCD, PCDD	98	
RD, ORD, DD, CBC, CBCD	all	9.53 [.375]
ODD	0, 1, 2	
SND	0, 1, 12	
SDD	all	
SCBC, SCBCD	all	
SD	all	11.10 [.437]

SWAGED SPACER WITH BOARDLOCK

S6*1

Standoffs, swaged, 4-40, boardlocks

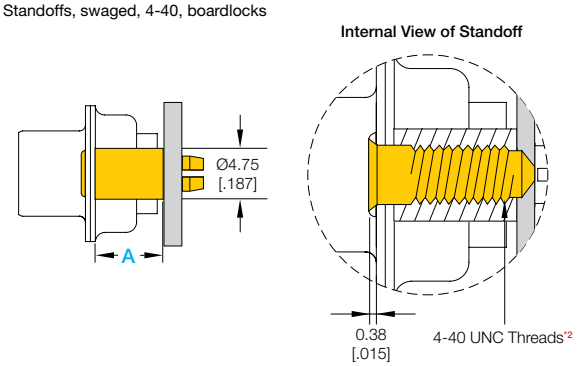

SERIES	Termination Code	A
MD, MDX, HDC	3, 32, 33, 36	5.72 [.225]
ODD	3, 32	
SND	3, 32, 36	
CBD, CBM, CBDD	3, 35, 36, 37, 65	6.35 [.250]
SCBM	3, 35, 36, 37, 65	
SCBDD	3, 35, 36, 37, 65	
DD	3, 32	9.53 [.375]
SDD	3, 32	
SD	3, 32	11.10 [.437]

*1 Printed board mounting hole to be Ø3.12±0.08 [.123±.003] for use with boardlocks.
*2 Non-removable threaded hardware is built and inspected to 5in/lbs or 80 in/oz torque.

S7*1

Standoffs, swaged, 4-40, boardlocks, for use with F ferrite inductor

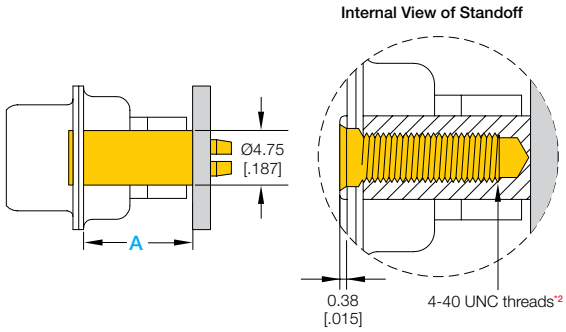

Connector Series	Termination Code	A
MD, MDX, HDC, ODD	32, 33	9.53 [.375]
ED, HDC	36	
DD	32, 33	13.08 [.515]

SWAGED LOCKNUT

S5

Locknut, swaged, 4-40

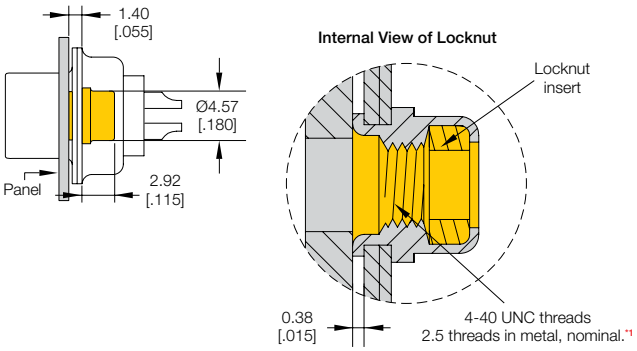

*1 Non-removable threaded hardware is built and inspected to 5in/lbs or 80 in/oz torque.

SWAGED PLASTIC MOUNTING BRACKETS WITH ALIGNMENT BAR

Non-conductive mounting brackets are necessary in many applications.

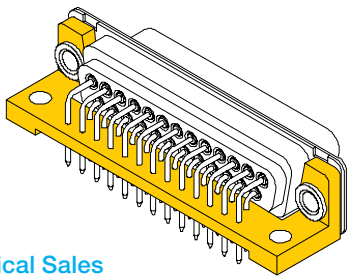

Contact Technical Sales for more information

ANGLE BRACKET*1

R
Angle brackets, swaged, metal with fixed female jackposts

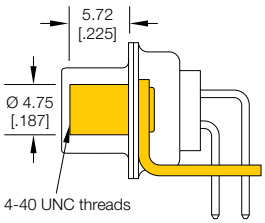

R2*1
Angle brackets, swaged, metal, alignment bar with fixed female jackposts

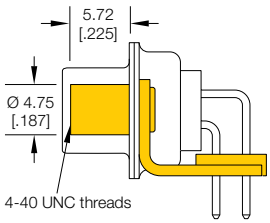

R3
Angle brackets, swaged, metal, clearance hole, Ø3.05 [.120]

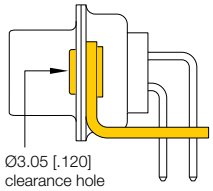

R6*1
Angle brackets, swaged, metal, clearance hole, Ø3.05 [.120], alignment bar

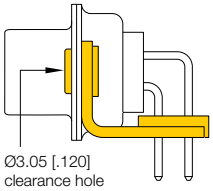

R4
Angle brackets, swaged, metal, 4-40 threaded hole

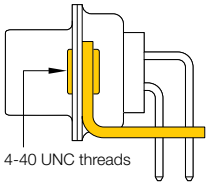

R7*1
Angle brackets, swaged, metal, 4-40 threaded hole, alignment bar

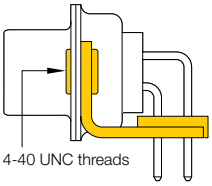

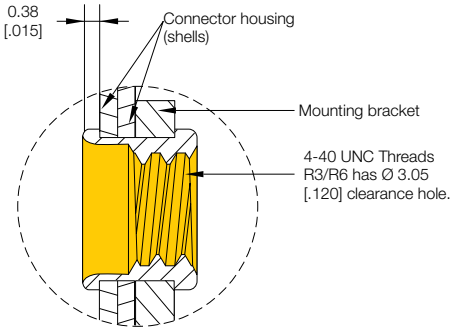

R5
Angle brackets, swaged, metal, 4-40 locknut

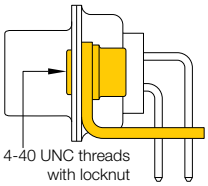

R8*1
Angle brackets, swaged, metal, 4-40 locknut, alignment bar

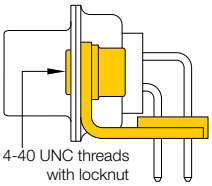

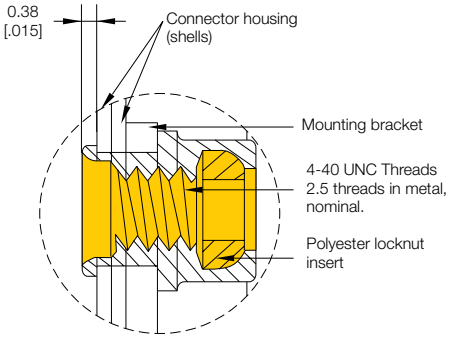

*1 Contact alignment bar is supplied with R2, R6, R7 and R8 options only.

FERRITE INDUCTOR BAR / BEADS

F
Ferrite inductor*1

Q
Ferrite inductor*1,
for use with boardlocks and
right angle mounting brackets

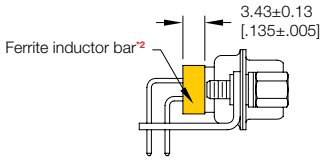

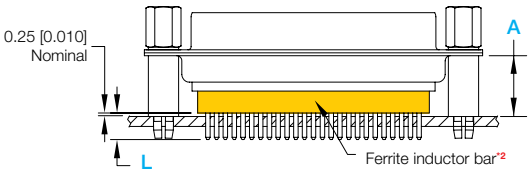

Notes

*1 This bar option is available for connector layout options 9, 15, 25, and 37. Ferrite beads are used for the other sizes. Contact Technical Sales for ferrite inductor ordering information on those connectors.

*2 Specify Code F or Q when ordering. F is for ferrite inductor and Q is for ferrite inductor with boardlocks and right angle brackets.

FILTERING CHARACTERISTICS

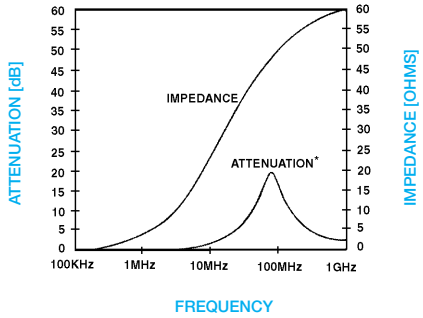

FERRITE INDUCTOR AVAILABILITY			
Termination Code	Series	A	L
32	MD, MDX, HDC	9.53 [.375]	6.10 [.240]
	ODD	9.53 [.375]	4.19 [.165]
	DD	13.08 [.515]	4.19 [.165]
33	MD, MDX, HDC	9.53 [.375]	9.27 [.365]
36	ED, HDC	9.53 [.375]	2.57 [.101]
4	MD, MDX	-	-
5	ODD	-	-
59	MD	-	-
6	MD, HDC	9.53 [.375]	9.14 [.360]

BOARDLOCKS

For use with code R,R2,R3,R4,R5,R6,R7,and R8

N
Boardlocks, for use with angle brackets

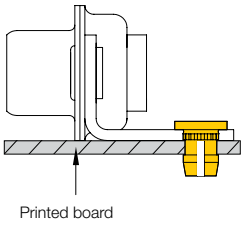

Printed board mounting hole to be Ø3.120±0.08 [.123±.003] for use with boardlock.

Internal View of Boardlock

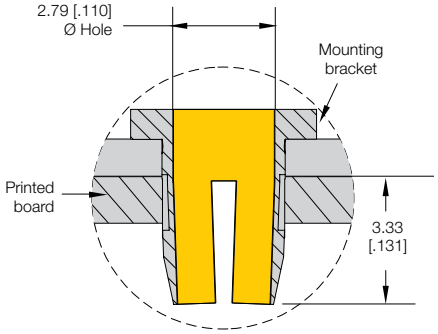

Typical Performance Evaluation Data				
Printed Board Hole Ø	Insertion force		Retention force	
	Newton	Lbs.	Newton	Lbs.
3.05 [.120]	32.25	7-1/4	25.58	5-3/4
3.12 [.123]	25.58	5-3/4	24.47	5-1/2
3.18 [.125]	12.23	2-3/4	11.12	2-1/2
3.25 [.128]	7.78	1-3/4	10.01	2-1/4
3.20 [.126] Plated	7.78	1-3/4	10.01	2-1/4

BLIND MATE SYSTEM

Blind mating guide pins (MOS -759.0)

To obtain blind mating guide pins, add the suffix '-759.0' to the end of the part number.

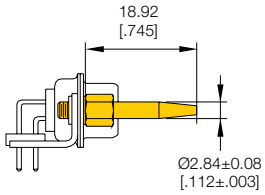

Float mounting plate (MOS -759.1)

To obtain float mounting plate, add the suffix '-759.1' to the end of the part number.

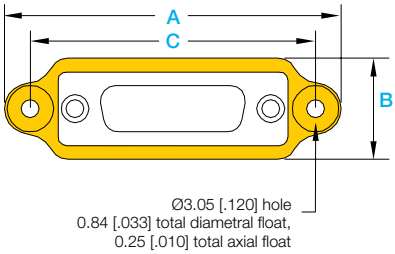

Shell Size	A (nominal)	B	C
1	49.02 [1.93]	17.20 [0.677]	40.28 [1.586]
2	57.35 [2.258]	17.20 [0.677]	48.62 [1.914]
3	71.25 [2.805]	17.20 [0.677]	62.51 [2.461]
4	87.53 [3.446]	17.20 [0.677]	78.79 [3.102]
5	85.14 [3.352]	20.04 [0.789]	76.40 [3.008]
6	87.53 [3.446]	21.59 [.850]	78.79 [3.102]

The use of blind mating hardware on D-Sub connectors can create functional challenges within the application and therefore requires additional mechanical design rigor. Be aware that system tolerances must be exact and mating force allowances may need to be higher than expected. Customers should qualify the use of this option in their particular application.

Contact Technical Sales for additional ordering information

FLARED CONNECTOR HOUSING (SHELL)

Flared MOS-1503.33

Flared connector housing

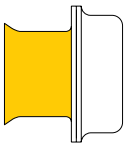

Flared connector housings provide a more **generous misalignment** characteristics than standard D-subminiature connector housings.

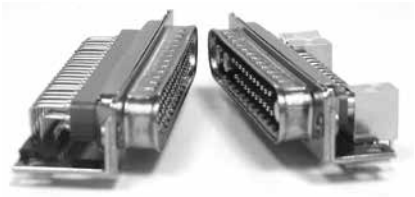

Contact Technical Sales for part numbers and detail information.

Standard

Connector housing for reference

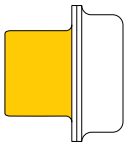

IN-LINE CRIMP SPLICE

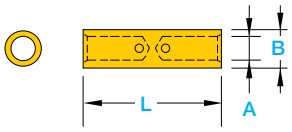

PART NUMBER	WIRE SIZE AWG / [mm2]	L	A	B
PSK43636-*1	20-26 [0.5/0.12]	12.70 [.500]	1.14 [.045]	1.93 [.076]
PSK43637-*1	16-20 [1.5/0.5]	14.61 [.575]	1.68 [.066]	2.57 [.101]
PSK43638-*1	12-18 [4.0-1.0]	14.66 [.577]	2.46 [.097]	3.81 [.150]

*1 To order crimp splice with insulating sleeve, add '-W' suffix to part number. To order without sleeve, add '-N' suffix.

Contact Technical Sales for crimp tool part number

CUL-DE-SAC STYLE INSIDE WALL MOUNT

For use with code WD and WDD

C5*1

Inside wall mount

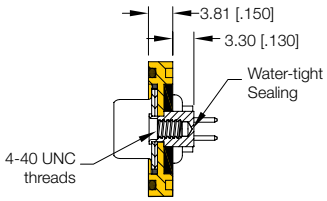

C7*1

Inside wall mount, angle brackets, boardlocks, alignment bar

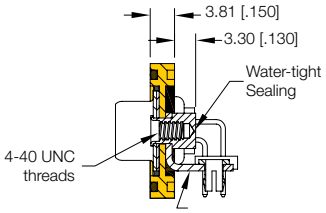

C8*1

Inside wall mount, boardlocks

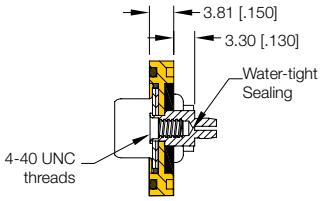

ENCLOSURE WALL MOUNT SEALING PLATE

For use with code WD and WDD

A*1

Inside wall mount sealing plate

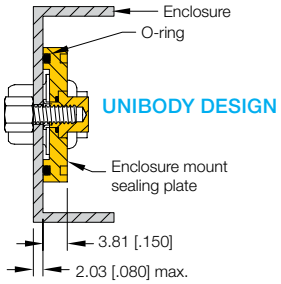

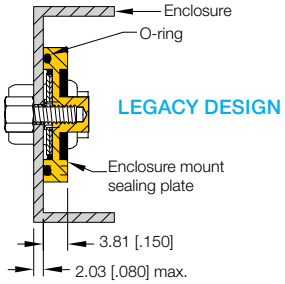

*1 Sealing plate is mounted to enclosure wall with jackscrews torqued to a value of .20 Nm [1.75 in-lb] minimum, .25 Nm [.2.25 in-lb] maximum.

OUTSIDE WALL ENCLOSURE MOUNT

For use sealed D-sub connectors requiring to be mounted to outside of the enclosure

C9

Outside wall mount, sealing plate*1

NOTE: Outside wall mount not available in unibody design

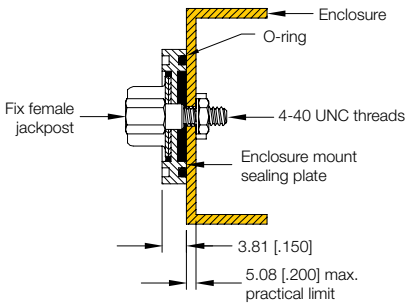

*1 Sealing plate is mounted to enclosure wall with jackscrews torqued to a value of .20 Nm [1.75 in-lb] minimum, .25 Nm [.2.25 in-lb] maximum.

Contact Technical Sales for additional ordering information

INTERFACIAL SEAL

Available for male connectors only. Furnished with all male WD and WDD series connectors

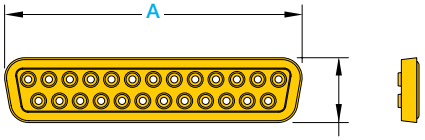

Size 25 interfacial seal shown for reference only

Contact Technical Sales for additional ordering information

Shell Size	Gender	A	B
1	Male	17.17 [.676]	8.59 [.338]
2	Male	25.40 [1.000]	8.59 [.338]
3	Male	39.37 [1.550]	8.59 [.338]
4	Male	55.57 [2.188]	8.59 [.338]
5	Male	52.78 [2.078]	11.18 [.440]
6	Male	56.17 [2.212]	12.85 [.506]

INTERFACIAL SEAL / REAR GROMMENTS

For use with EVD series

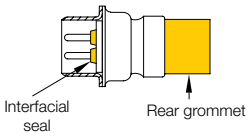

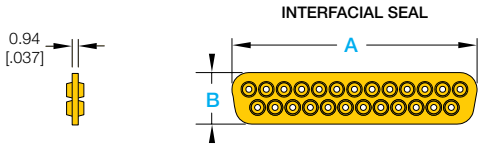

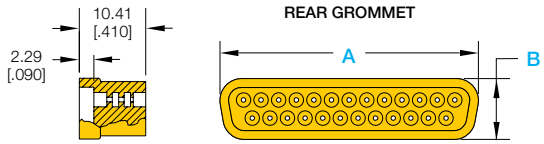

INTERFACIAL SEAL & REAR GROMMET			
Layout	Seal Type	A	B
9	Interfacial	16.51 [.650]	8.08 [.318]
	Grommet	18.421 [.725]	9.53 [.375]
15	Interfacial	24.84 [.978]	8.08 [.318]
	Grommet	26.70 [1.051]	9.53 [.375]
25	Interfacial	38.43 [1.513]	8.08 [.318]
	Grommet	40.51 [1.595]	9.53 [.375]
37	Interfacial	54.76 [2.156]	8.08 [.318]
	Grommet	57.07 [2.247]	9.53 [.375]
50	Interfacial	52.27 [2.058]	10.80 [.425]
	Grommet	54.53 [2.147]	12.45 [.490]

SEALING PLUGS

For use with EVD series, Order separately, part number A4737-37-0-0

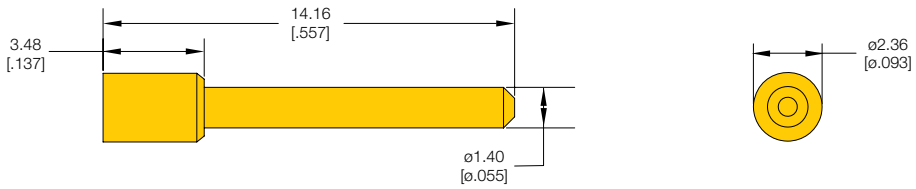

PROTECTIVE COVER

Cover Without Ears

For connectors without fixed female jackscrews

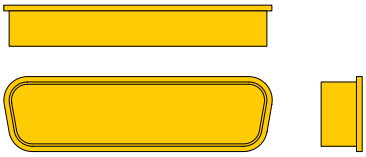

Cover With Ears

For connectors with fixed female jackscrews

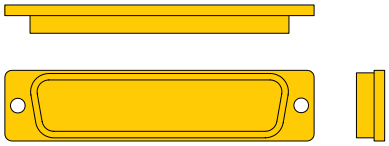

Shell Size	Gender	REPLACEMENT PART NUMBERS		
		Conductive Without Ears	Static Dissipative Without Ears	With Ears
1	Male	A4931-9-0-0	A4931-9-1-0	A4931-9-100-0
	Female	A4932-9-0-0	A4932-9-1-0	A4932-9-100-0
2	Male	A4931-15-0-0	A4931-15-1-0	A4931-15-100-0
	Female	A4932-15-0-0	A4932-15-1-0	A4932-15-100-0
3	Male	A4931-25-0-0	A4931-25-1-0	A4931-25-100-0
	Female	A4932-25-0-0	A4932-25-1-0	A4932-25-100-0
4	Male	A4931-37-0-0	A4931-37-1-0	A4931-37-100-0
	Female	A4932-37-0-0	A4932-37-1-0	A4932-37-100-0
5	Male	A4931-50-0-0	A4931-50-1-0	A4931-50-100-0
	Female	A4932-50-0-0	A4932-50-1-0	A4932-50-100-0
6	Male	- - -	- - -	A4931-16-100-0
	Female	- - -	- - -	A4932-16-100-0

EMI/RFI PROTECTIVE COVER

For use with code SAD, SADD, SACBM, SND, SDD, SCBM, SCBC, SCBDD and SCBCD

EMI/RFI Cover

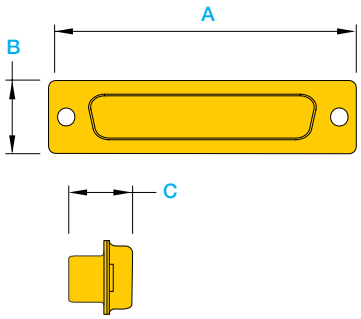

Shell Size	PART NUMBER	Mates To Gender	A ±0.38 [.015]	B ±0.38 [.015]	C ±0.25 [.010]
1	PSK633-9MG*1	Female	30.81 [1.213]	12.55 [.494]	10.72 [.422]
	PSK633-9FG*1	Male			10.90 [.429]
2	PSK633-15MG*1	Female	39.14 [1.541]	12.55 [.494]	10.72 [.422]
	PSK633-15FG*1	Male			10.90 [.429]
3	PSK633-25MG*1	Female	53.04 [2.088]	12.55 [.494]	10.82 [.426]
	PSK633-25FG*1	Male			10.90 [.429]
4	PSK633-37MG*1	Female	69.32 [2.729]	12.55 [.494]	10.82 [.426]
	PSK633-37FG*1	Male			10.90 [.429]
5	PSK633-50MG*1	Female	66.93 [2.635]	15.37 [.605]	10.82 [.426]
	PSK633-50FG*1	Male			10.90 [.429]
6	PSK633-104MG*1	Female	69.32 [2.729]	16.97 [.668]	10.82 [.426]
	PSK633-104FG*1	Male			10.90 [.429]

*1 To order protective cover with code 'E2' rotating male screw locks, insert "N" into the last digit of part number. Omit this digit if thread locks are not required.

MACHINED ALUMINUM MOUNTING PLATE

With conductive o-ring

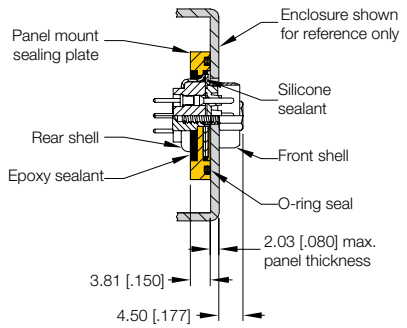

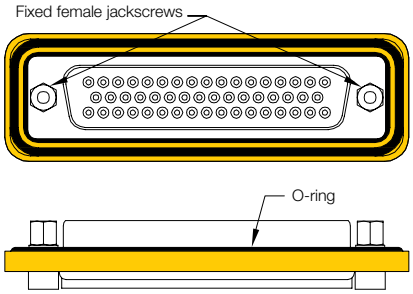

OTHER SEALED D-SUBMINIATURE CONNECTOR OPTIONS

MD Style Connector

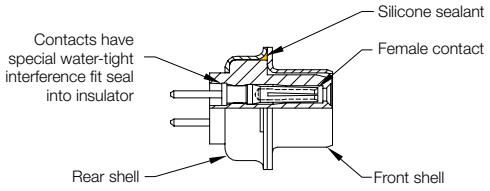

COMBO-D Style Connector

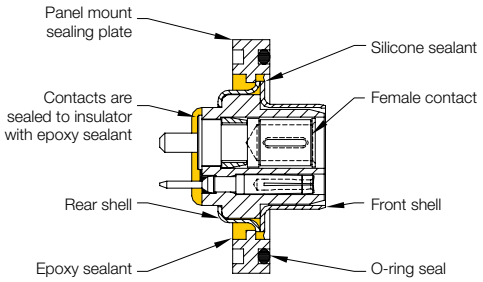

ODD Style Connector

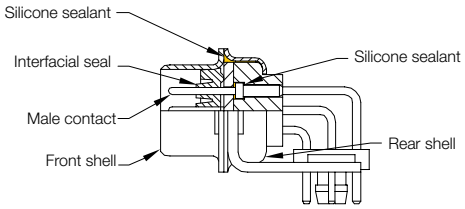

COMBO-D Style Connector

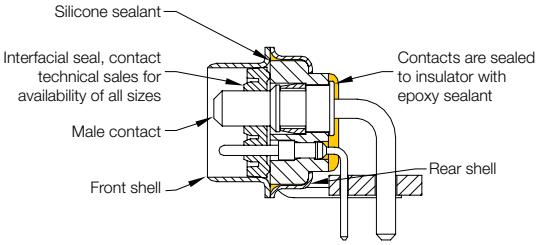

SEALED STANDARD OR HIGH DENSITY D-SUBMINATURE

- Available in both standard density and high density connector variants.
- Standard MD or ODD series connectors can be sealed between the connector shell and the connector insert.
- Contact technical sales for more information.

SEALED COMBINATION D-SUBMINATURE

- Could be supplied with mounting plate or without.
- Contact technical sales for more information or additional contact configurations.

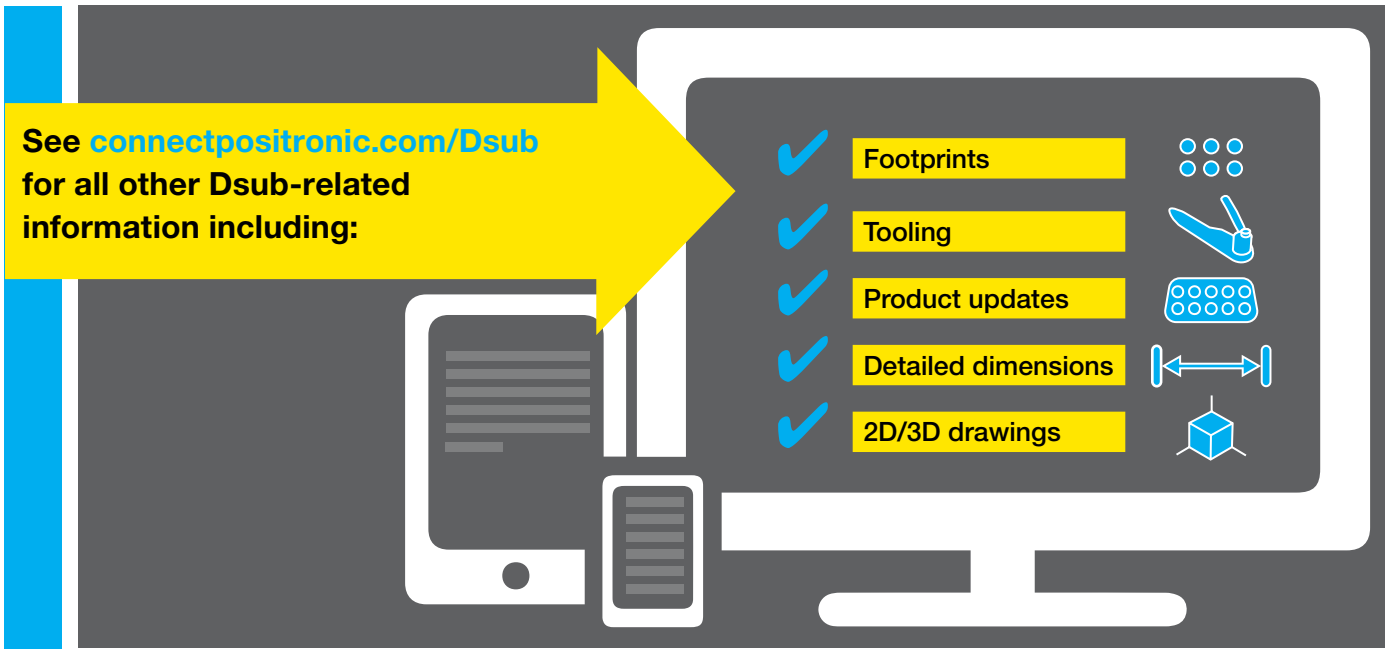

All dimensional tolerances are ± 0.38 [0.015], unless otherwise specified. Dimensions are in millimeter [inches]. All dimensions are subject to change. Product pictures may not be identical in appearance to actual production parts.

Products described within this catalog may be protected by one or more of the following US patents:

#4,900,261*	#5,255,580	#5,329,697	#6,260,268
#6,835,079	#7,115,002	#8,944,697	#9,304,263

*Patented in Canada, 1992 Other patents pending

Federal Supply Code for Manufacturers

Positronic Industries: 28198
Positronic Industries SAS: FA7Y0
Positronic Asia PTE LTD: QB952

Positronic | Americas
423 N Campbell Ave
Springfield MO 65806 USA
+1 800 641 4054
info@connectpositronic.com

Positronic | Europe
46 route d'Engachies
F-32020 Auch Cedex 9 France
+33 5 6263 4491
contact@connectpositronic.com

Positronic | Asia
3014A Ubi Rd 1 #07-01
+65 6842 1419
Singapore 408703
singapore@connectpositronic.com

Sales Offices
Positronic has local sales representation all over the world. For the nearest sales office visit www.connectpositronic.com/sales