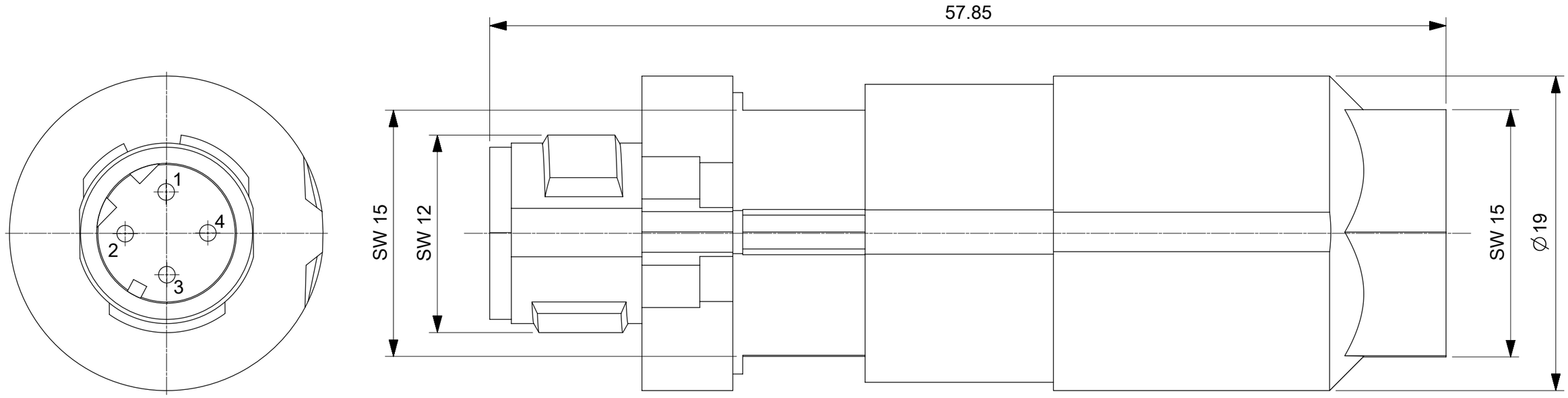

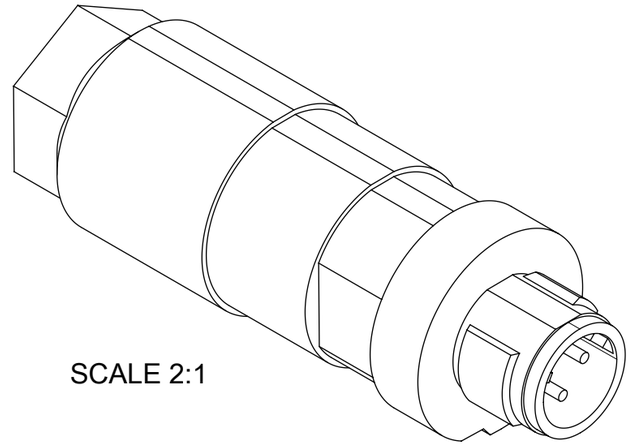

SCALE 2:1

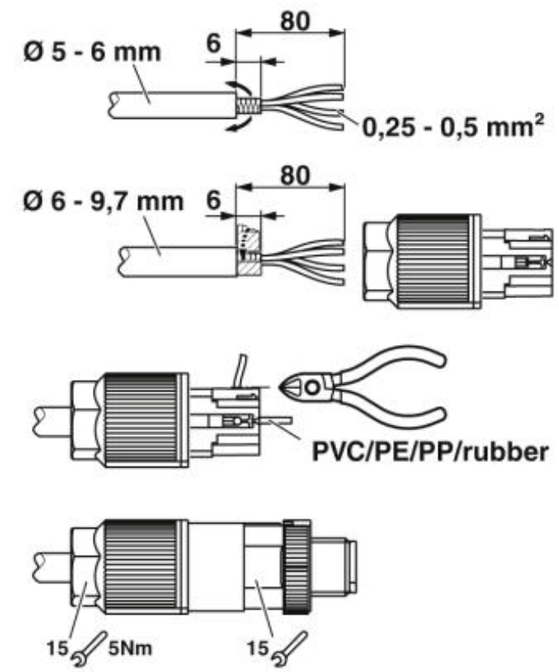

NOTES:

Ambient temperature (operation):
-40 °C ... 85 °C (Plug / socket)
Degree of protection: IP67
General:
Rated current at 40°C: 4 A
Rated voltage: 250 V
Number of poles: 4
Signal type/category:
PROFINET CAT5 (IEC 11801), 100 Mbps
Connection method:
Insulation displacement connection
Conductor cross section: 0.25 mm² ... 0.5 mm²
Wire diameter including insulation: 0.75 mm ... 2 mm
Cable outlet: 5mm...9.7mm

Contact material: CuSn
Contact surface material: Ni/Au
Housing material: Zinc die-cast, nickel-plated

ENG.-No.: E1AS06-53

SYMBOLS			
FA = 0	DIMENSION UNITS: mm	SCALE: 4:1	
FC = 0	GENERAL TOLERANCES (UNLESS SPECIFIED)		
FB = 0	ANGULAR TOL	±	1.0 °
S = 0	4 PLACES	±	
▼ = 0	3 PLACES	±	
C = 0	2 PLACES	±	0.05
☒ = 0	1 PLACE	±	0.3
■ = 0	0 PLACES	±	0.5
= 0	DRAFT WHERE APPLICABLE MUST REMAIN WITHIN DIMENSIONS		

THIS DRAWING CONTAINS INFORMATION THAT IS PROPRIETARY TO MOLEX ELECTRONIC TECHNOLOGIES, LLC AND SHOULD NOT BE USED WITHOUT WRITTEN PERMISSION

CURRENT REV DESC: ER20180108

EC NO:	177169	
DRWN:	FDAFERNER	2018/05/24
CHK'D:	THAERDT	2018/05/25
APPR:	THAERDT	2018/05/25
INITIAL REVISION:		
DRWN:	MSCHWARZ	2015/09/01
APPR:	CBRUNS	2016/04/11

THIRD ANGLE PROJECTION | DRAWING: A3-SIZE | SERIES: 130047

molex

FA M12 4P DC MA STR IDC SHLD

PRODUCT CUSTOMER DRAWING

DOCUMENT NUMBER	DOC TYPE	DOC PART	REVISION
1300470039	PSD	000	A8

MATERIAL NUMBER	CUSTOMER	SHEET NUMBER
1300470039	GENERAL MARKET	1 OF 1

DOCUMENT STATUS	P1	RELEASE DATE	2018/05/25	06:29:13

FORMAT: master_tb_mod-A3
REVISION: H
DATE: 2018/01/18