Ratings
Voltage: 600 V
Temperature: -40~105 °C
Flammability: FT2

Conductor
Conductor count: 5
Gauge: 30 AWG 0.05 mm²
Material: tinned copper strands
Strand size: ∅0.1 x 7
Resistance at 20 °C: 381 Ω /km max

Insulator
Material: mPPE
Color: red, black, white, yellow, blue
Diameter: ∅0.8 ±0.08 mm
Average thickness: 0.23 mm
Minimum thickness: 0.18 mm
Resistance at 20 °C: 100 MΩ /km min

Shield
Type: foil
Material: aluminum mylar
Coverage: 100%

Filler
Material: cotton rope

Outer jacket
Material: mPPE, 85A
Color: black
Diameter: ∅3.9 ±0.15 mm
Average thickness: 0.82 mm
Minimum thickness: 0.57 mm

Wire marking: E339579 UL AWM STYLE 21509 30 AWG 105°C 600V - - - cUL AWM I A 105°C 600V FT2 TENSILITY

Bend radius
Minimum: 6 times diameter (23.4 mm)

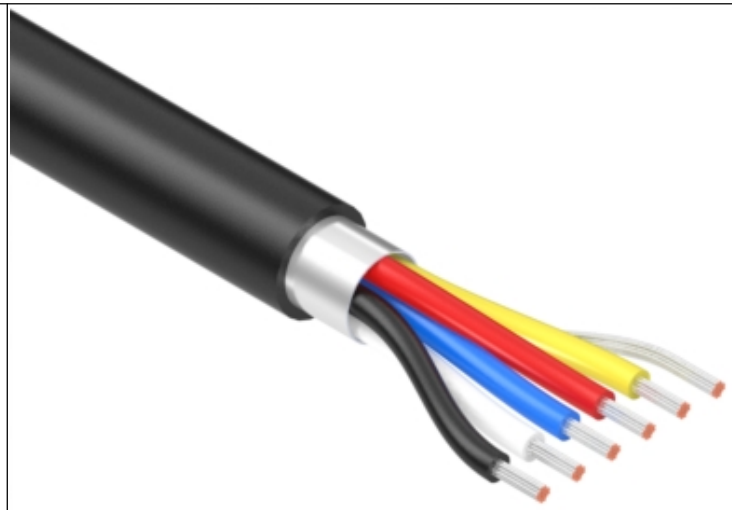

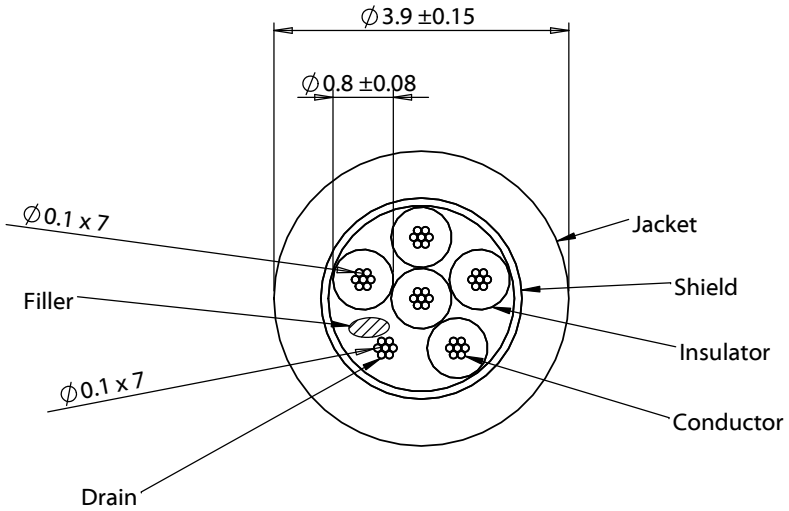

Revision:	Date:	Description:
A	4/20/2020	Initial release

Prepared: JC Digitally signed by JC Date: 2020.04.21 15:16:34 -07'00'

Verified: AW Digitally signed by AW Date: 2020.04.21 16:30:48 -07'00'

Dimensions are in millimeters.
Tolerances:
X: ± 0.5 mm
X.X: ± 0.3 mm
X.XX: ± 0.05 mm

Notes:
RoHS compliant
Phthalate and halogen free

Description:
Wire, 5C TS, 30 AWG, 21509, 600V, 105C, 3.9 mm, shielded, FT2, mPPE

TENSILITY
tel 1.541.323.3228 800 877.670.7118
fax 1.541.323.4202 web tensility.com

Size: A
Part number: 30-01462
Scale: 10:1
Sheet 1 of 1

To see a custom version of this cable assembly, call Tensility at 541-323-3228 or email engineering@tensility.com

5 4 3 2 1