NOTES:
1- MATERIAL :
HOUSING :-LCP GLASS FILLED UL 94V0, COLOUR: BLACK
TERMINAL:-BRASS PLATED WITH:
PLATING 2: 0.00127 MIN GOLD IN CONTACT AREA, 0.00190 MIN PURE TIN IN TAIL AREA, BOTH OVER 0.00127 MIN NICKEL OVERALL.
PLATING 7: 0.00005 MIN GOLD FLASH OVER, 0.0006 MIN PALLADIUM-NICKEL IN CONTACT AREA, 0.00190 MIN PURE TIN IN TAIL AREA, BOTH OVER 0.00127 MIN NICKEL OVERALL.
SHIELD: BRASS PLATED WITH 0.0020 MIN TIN.
2- P.C. BOARD THICKNESS: 1.57±0.15
3- JACK FOR MATING WITH F.C.C. 68 PLUGS
4- PRODUCT SPECIFICATION: PS-95540-002
5- PACKAGING SPECIFICATION: PK-95540-001
6- MANUFACTURING I.D. CAN BE EITHER MXI, MG OR MXF.
7- KAPTON ADHESIVE FOIL: 0.125 THICK

LAST INSPECTION BALLOON: 14

| MATERIAL NUMBER | PLATING |
|---|---|
| 95540-7886 | 2 |
| 95540-7885 | 7 |

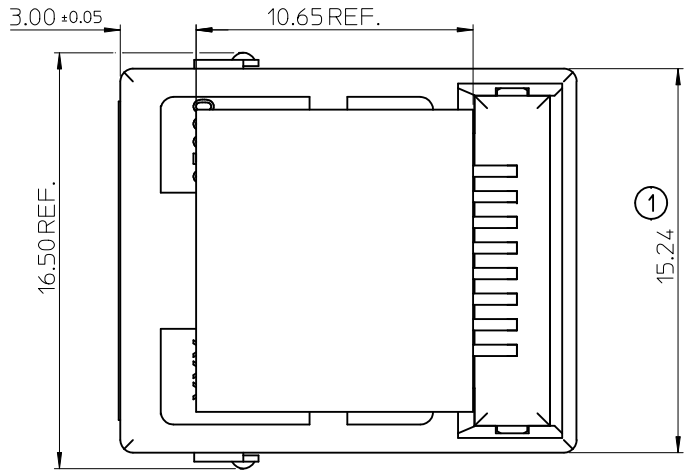


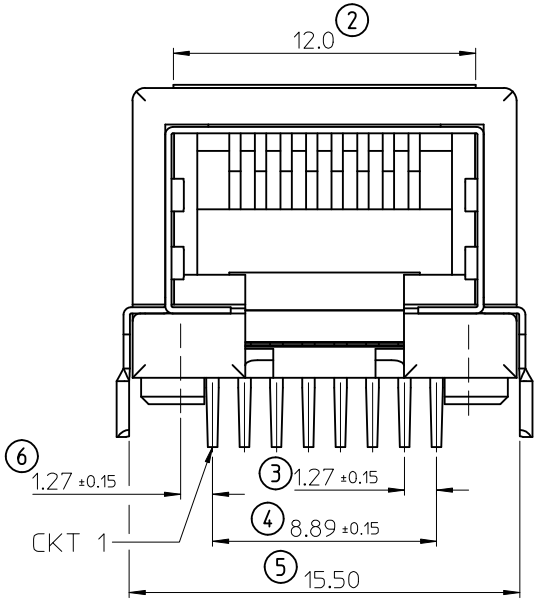


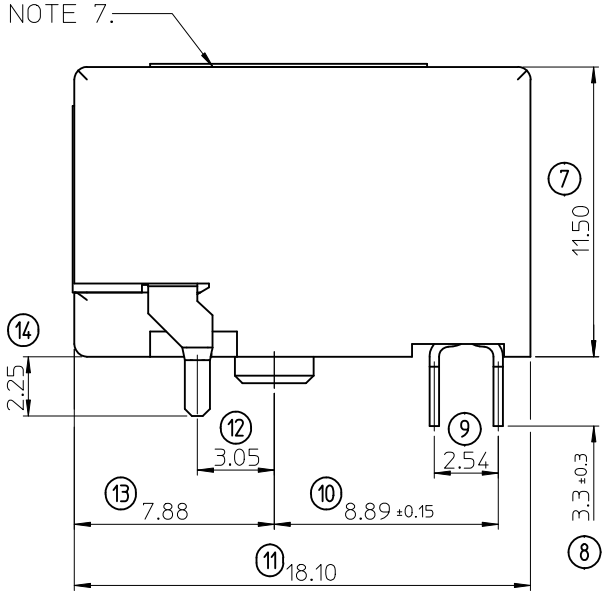


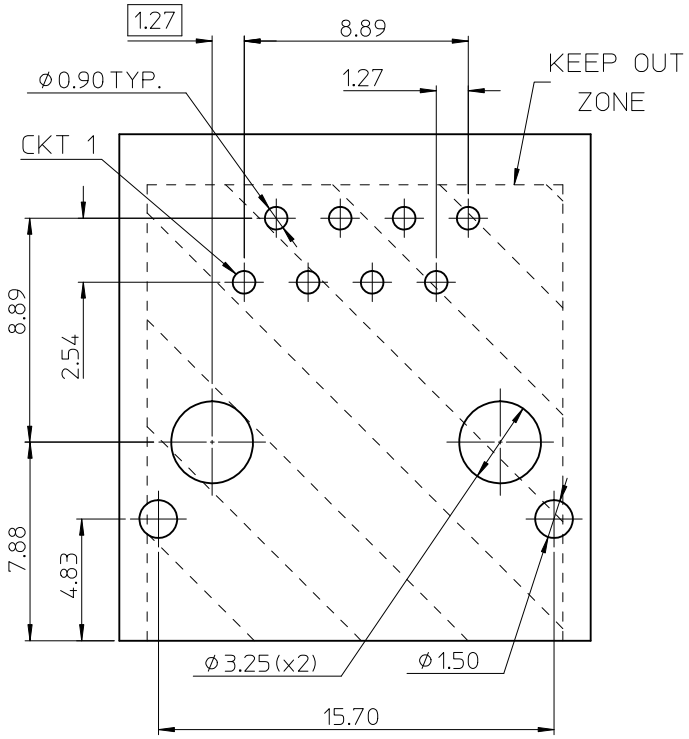


RECOMMENDED P.C. BOARD LAYOUT
VIEW FROM COMPONENT SIDE
ALL DIMENSIONS REF DIMENSIONS

| REV | DESCRIPTION | |
|---|---|---|
| B | ADDED OPTION | |
| | EC NO: E2012-0092 | 2011/03/10 |
| | DRWN:DBYRNES | |
| | CH'KD: | |
| | APPR:EFOLAN | 2011/10/13 |

QUALITY SYMBOLS
▼=0
Ⓒ=0

GENERAL TOLERANCES (UNLESS SPECIFIED)

| | mm | INCH |
|---|---|---|
| 4 PLACES | ± --- | ± --- |
| 3 PLACES | ± --- | ± --- |
| 2 PLACES | ± 0.10 | ± --- |
| 1 PLACE | ± 0.15 | ± --- |
| ANGULAR ± .5 ° | | |

DRAFT WHERE APPLICABLE MUST REMAIN WITHIN DIMENSIONS

DIMENSION STYLE: MM ONLY
SCALE: 5:1
DESIGN UNITS: METRIC
THIRD ANGLE PROJECTION

DRAWN BY: D.BYRNES DATE: 2009/08/20
CHECKED BY: JDWALLACE DATE: 2009/08/21
APPROVED BY: JDWALLACE DATE: 2009/08/21
MATERIAL NO.: SEE CHART

TITLE: RIGHT ANGLE LOW PROFILE SHIELDED PC JACK 8CKT T/HOLE

molex MOLEX INCORPORATED

DOCUMENT NO.: SD-95540-002
SHEET NO.: 1 OF 1
SIZE: A3

THIS DRAWING CONTAINS INFORMATION THAT IS PROPRIETARY TO MOLEX INCORPORATED AND SHOULD NOT BE USED WITHOUT WRITTEN PERMISSION