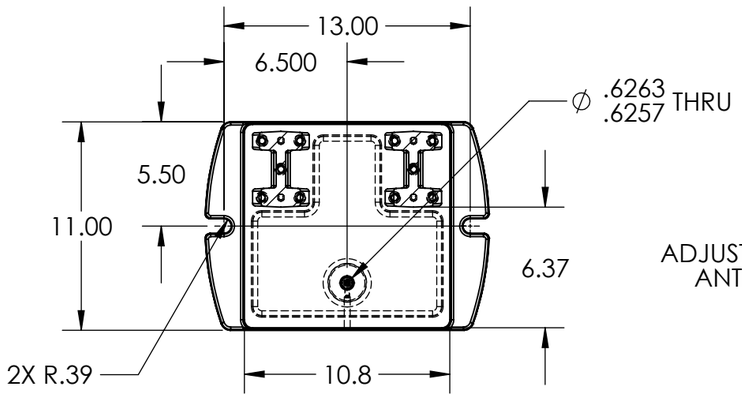

SECTION A-A
SCALE 1 : 8

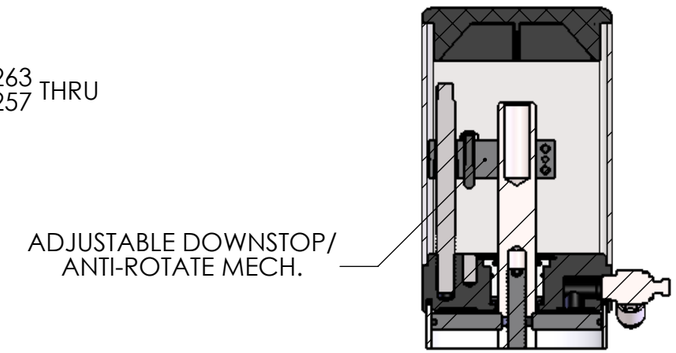

SECTION B-B
SCALE 1 : 4

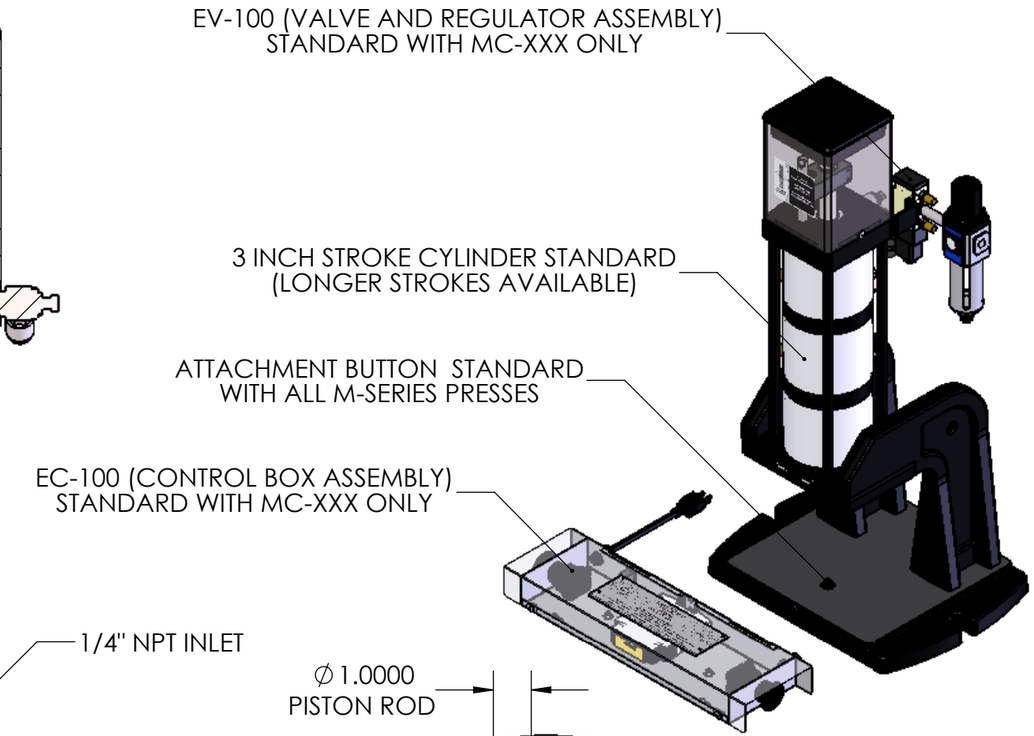

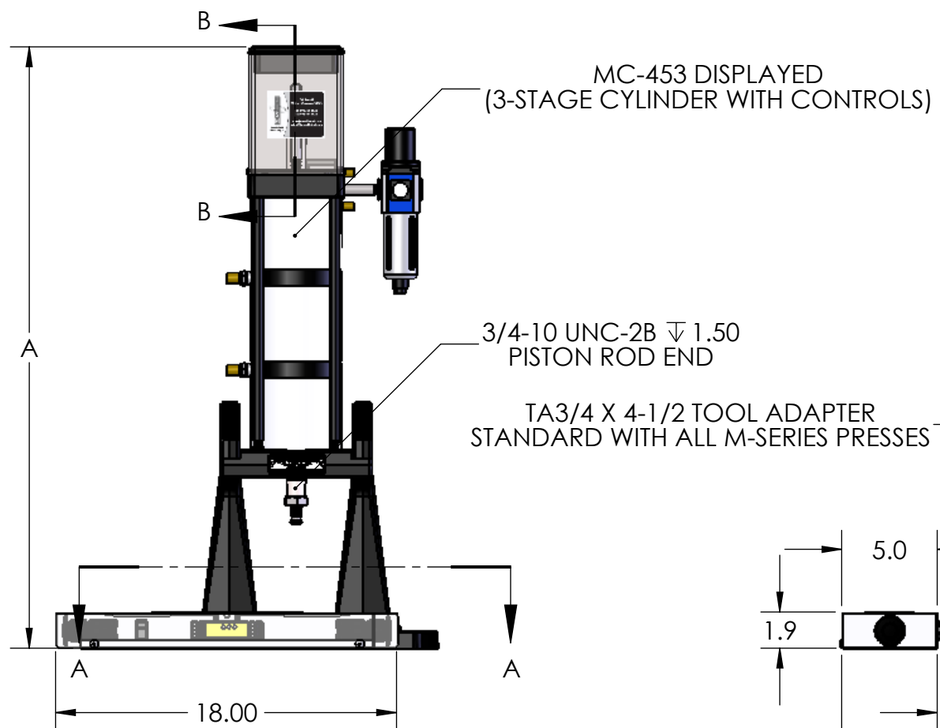

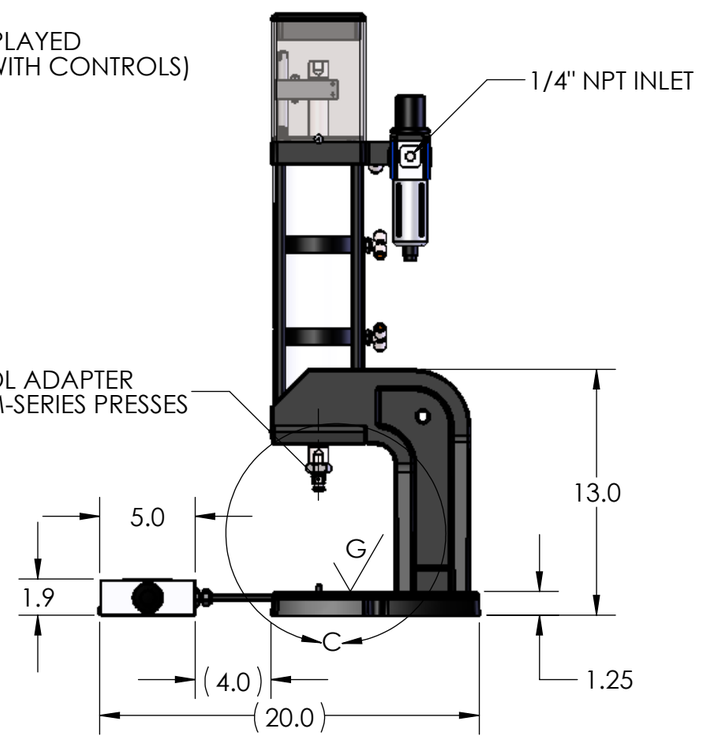

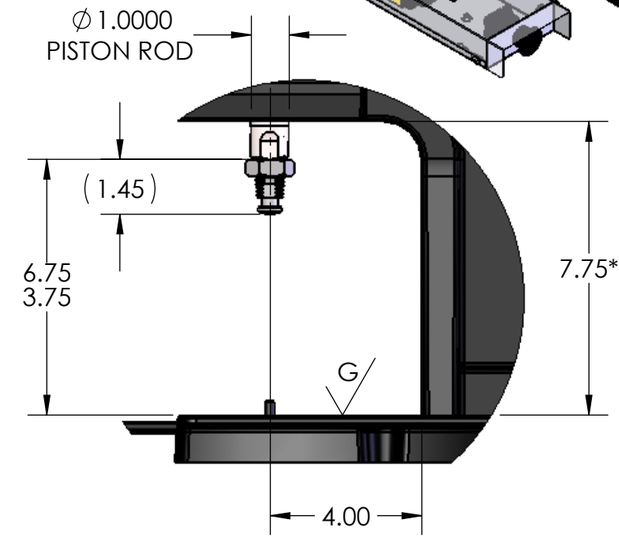

DETAIL C
SCALE 1 : 4

MODEL #	FORCE @ 80 PSI	WEIGHT	DIM. A
MC-151	1208	118 LBS	22.1
MC-302	2416	125 LBS	26.9
MC-453	3624	151 LBS	31.8

NOTES:

1. MC-XXX SERIES ARE COMPATIBLE WITH #1MDS-A~#7MDS-A DIE SETS
2. *THROAT HEIGHT CAN BE INCREASED WITH OPTIONAL RISER BLOCK KIT
3. PARTS SUBJECT TO CHANGE WITHOUT NOTICE

Janesville Tool & Manfacturing Inc.
3930 Enterprise Drive
Janesville, WI 53546
Phone: 608-314-1620, Fax: 608-314-1625

Janesville Tool & Manufacturing, Inc.

TITLE:

PNEUMATIC PRESS

SIZE	DWG. NO.	REV
B	M SERIES	A
SCALE: 1:12	WEIGHT: N/A	SHEET 1 OF 1